Toomoco(Shenzhen) Precision Technology Co.,Ltd

Add：Room 902-905, Chang 'an building, no. 56, Houting Second Industrial Zone, Sha Jing Street, Bao 'an district, Shenzhen City,518104

Web：www.toomoco.com

TEL：0755-2300 6153

E-mali:liao@toomoco.com

TMC TOOMOCO

2022

TMC® TOOMOCO

2022

Qur Faithfulness:

Profession,Reliability,Detailing.

Our Goals:

Devoted to mouldmakeing industrial and aimed to be a reliable brand from China.

Trust——Dericed from Safetu,Reliability,High Quality and Cost-effective

导柱导套系列
Guide pins guide bush series

1

定位系列
Location series

2

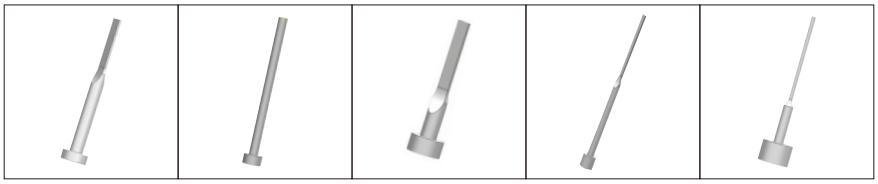

顶针系列
Ejectorn pins

3

通用类模具配件
General mould components

4

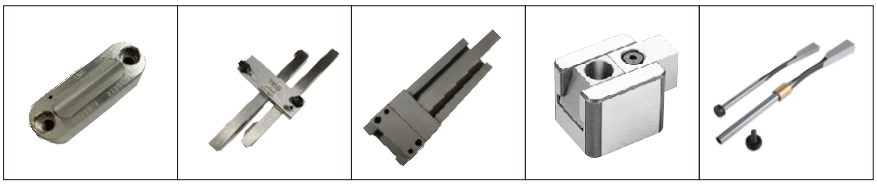

脱模系列
Demoulding series

5

冷却系列
Cooling series

7

Nr./No.		名称	Designation	页数 Seite / Page
C1000	HASCO Z00	导柱	Guide pins	1.02
C1001	HASCO Z01	导柱	Guide pins	1.12
C1002	HASCO Z010	导柱	Guide pins	1.15
C1004	HASCO Z011	斜导柱	Angle guide pins	1.16
C1006	HASCO Z013	导柱	Guide pins	1.18
C1007	HASCO Z016	斜导柱	Angle guide pins	1.19
C1010	HASCO Z02	导柱	Guide pins	1.20
C1011	HASCO Z03	导柱	Guide pins	1.22
C1012	HASCO Z04	导柱	Guide pins	1.31
C1500	HASCO Z10	导套	Guide bush	1.40
C1501	HASCO Z1000W	导套	Guide bush	1.43
C1510	HASCO Z11	导套	Guide bush	1.45
C1511	HASCO Z1100W	导套	Guide bush	1.51
C1513	HASCO Z13W	导套	Guide bush	1.55
C1514	HASCO Z14W	导套	Guide bush	1.56
C1700	MEUSBURGER E1330	钢珠导套	Steel ball guide bush	1.57
C1800	HASCO Z12	钢珠导套	Steel ball guide bush	1.58
C1850	HASCO Z13	钢珠导套	Steel ball guide bush	1.59
C2050	HASCO Z09…/1	定位块	Square interlocks	2.08
C2051	HASCO Z09…/3	定位块	Square interlocks	2.09
C2100	HASCO Z060	定位块	Square interlocks	2.10
C2102	HASCO Z080	定位块	Square interlocks	2.11
C2103	HASCO Z082	定位块	Square interlocks,DLC	2.12
C2105	HASCO Z085…/1	定位块	Square interlocks	2.13
C2106	HASCO Z085…/2	定位块	Square interlocks,DLC	2.14
C2200	HASCO Z07	定位块	Square interlocks	2.15
C2201	HASCO Z17	定位块	Square interlocks	2.15
C2202	HASCO Z071…/1	定位块	Square interlocks	2.16
C2203	HASCO Z072…/1	定位块	Square interlocks	2.17
C2204	HASCO Z071…/2	定位块	Square interlocks,DLC	2.18
C2205	HASCO Z072…/2	定位块	Square interlocks,DLC	2.19
C2300	STRACK Z50	定位块	Square interlocks	2.20
C2301	STRACK Z51	定位块	Square interlocks,DLC	2.22
C2310	HASCO Z18	定位块	Square interlocks	2.24
C2311	HASCO Z19	定位块	Square interlocks	2.25
C2320	STRACK Z46	定位块	Square interlocks	2.26
C2400	MEUSBURGER E1304	定位块	Square interlocks	2.27

Nr./No.	名称	Designation	页数 Seite / Page
C2401 MEUSBURGER E1304	定位块	Square interlocks,DLC	2.28
C2403 MEUSBURGER E1306	定位块	Square interlocks,DLC	2.29
C2404 MEUSBURGER E1306	定位块	Square interlocks,DLC	2.30
C2405 MEUSBURGER E1308	定位块	Square interlocks,DLC	2.31
C2406 MEUSBURGER E1308	定位块	Square interlocks,DLC	2.32
C2410 MEUSBURGER E1320	定位块	Square interlocks	2.33
C2910 HASCO Z05	定位柱	Round locating units	2.52
C3000 HASCO Z40	顶针	Ejector pins	3.02
C3100 HASCO Z44	有托顶针	Ejector pins	3.06
C3101 HASCO Z441	有托顶针	Ejector pins	3.07
C3200 HASCO Z46	扁顶针	Flat jector pins	3.09
C3201 HASCO Z465	扁顶针	Flat jector pins	3.10
C3600 HASCO Z45	司筒	Ejector sleeves	3.13
C4000 HASCO Z48	日期章	Date stamps	4.02
C4010 HASCO 4861	日期章	Date stamps	4.03
C4020 HASCO Z4800	日期章	Date stamps	4.04
C4400 STRACK Z7600	限位开关	Limit switch	4.07
C4500 HASCO Z491	气顶	Air valves	4.08
C4503 CUMSA VA	气顶	Air valves	4.11
C4810 HASCO Z38	等高螺丝	Shoudler bolt screwsvalves	4.13
C5120 HASCO Z73	安全扣	Tool safety devies	5.07
C5200 STRACK Z5130	限位夹	Slide retainers series	5.08
C5201 STRACK Z5134	限位夹	Slide retainers series	5.09
C5210 STRACK Z5140	限位夹	Slide retainers series	5.10
C5220 HASCO Z189	限位夹	Slide retainers series	5.11
C5221 MEUSBURGER E3044	限位夹	Slide retainers series	5.12
C5225 CUMAS RC	限位夹	Slide retainers series	5.13
C5226 CUMAS RM	限位夹	Slide retainers series	5.13
C5300 HASCO Z170	锁模扣	Latch locks	5.19
C5301 HASCO Z170	锁模扣	Latch locks,DLC	5.20
C5310 HASCO Z171	锁模扣	Latch locks	5.21
C5311 HASCO Z171	锁模扣	Latch locks,DLC	5.22
C5315 CUMAS GS	锁模扣	Latch locks	5.23
C5320 HASCO Z174	锁模扣	Latch locks	5.24
C5321 HASCO Z174	锁模扣	Latch locks,DLC	5.25

Nr./No.	名称	Designation	页数 Seite / Page
C5325 MEUSBURGER E1809	锁模扣	Latch locks	5.26
C5326 MEUSBURGER E1808	锁模扣	Latch locks	5.27
C5327 MEUSBURGER E1820	锁模扣	Latch locks	5.28
C5330 STRACK Z4	锁模扣	Latch locks	5.29
C5335 STRACK Z5	锁模扣	Latch locks	5.35
C5338 RABOURDIN REF	锁模扣	Latch locks	5.36
C5342 PROGRESSIVE PLC	锁模扣	Latch locks	5.42
C5343 PROGRESSIVE PLC	锁模扣	Latch locks	5.42
C5410 STRACK Z3	内锁模扣	Latch locks	5.51
C5420 HASCO Z173	内锁模扣	Latch locks	5.54
C5430 MEUSBURGER E1840	内锁模扣	Latch locks	5.55
C5500 CUMAS EP	加速顶出	Accelerated ejectors	5.56
C5510 CUMAS AE	早回机构	Early return mechanism	5.57
C5520 STRACK Z141	加速顶出	Accelerated ejectors	5.59
C5550 HASCO Z181	侧抽芯	Slide units	5.60
C5551 HASCO Z1810	侧抽芯	Slide units	5.61
C5552 HASCO Z1811	侧抽芯	Slide units	5.62
C5553 HASCO Z1812	侧抽芯	Slide units	5.63
C5554 HASCO Z1813	侧抽芯	Slide units	5.64
C5600 STRACK Z4290	侧抽芯	Slide units	5.65
C5780 CUMSA BG	斜导柱固定座	Angle pin housing	5.76
C5781 CUMSA GR	斜导柱固定座	Angle pin housing	5.77
C5800 HASCO Z169	二次顶出	Two-stage ejectors	5.85
C5810 HASCO Z1691	二次顶出	Two-stage ejectors	5.86
C5825 MEUSBURGER E1860	二次顶出	Two-stage ejectors	5.87
C5830 CUMAS DX	二次顶出	Two-stage ejectors	5.88
C5840 HASCO Z163	复位机构	Round latch locks	5.89
C5841 HASCO Z164	复位机构	Round latch locks	5.89
C5860 CUMAS LR	螺纹限位机构	Two-stage ejectors	5.92
C5861 CUMAS AL	螺纹限位机构	Two-stage ejectors	5.92
C5880 HASCO Z1500	来复线杆	Helical spindle	5.93
C5881 HASCO Z1520	来复线套	Helical spindle	5.95
C5900 CUMAS PW	弹弓顶	Sprung cores	5.97
C5901 CUMAS PF	弹弓顶	Sprung cores	5.98
C5902 CUMAS MP	弹弓顶	Sprung cores	5.99
C5910 MEUSBURGER E3200	弹弓顶	Sprung cores	5.100
C5911 MEUSBURGER E3202	两瓣弹弓顶	Sprung cores	5.101
C5920 CUMAS EE	四瓣弹弓顶	Slide stopers	5.102

Nr./No.	名称	Designation	页数 Seite / Page
C7003 HASCO Z94	喉塞	Pressure plugs	7.03
C7005 HASCO Z941	喉塞	Pressure plugs	7.04
C7006 HASCO Z942	喉塞	Pressure plugs	7.04
C7100 HASCO Z511	唧嘴	Straight pivgbaffles	7.07
C7101 HASCO Z512	唧嘴	Surue bushing	7.09

TMC®
TOOMOCO

1

Guide Pins & Guide Bush Series

C1000 1.02
导柱
Guide pins
HASCO Z00

C1001 1.12
导柱
Guide pins
HASCO Z01

C1002 1.15
导柱
Guide pins
HASCO Z010

C1004 1.16
斜导柱
Angle guide pins
HASCO Z011

C1006 1.18
导柱
Guide pins
HASCO Z013

C1007 1.19
斜导柱
Angle guide pins
HASCO Z016

C1010 1.20
导柱
Guide pins
HASCO Z02

C1011 1.22
导柱
Guide pins
HASCO Z03

C1012 1.31
导柱
Guide pins
HASCO Z04

C1500 1.40
导套
Guide bush
HASCO Z10

C1501 1.43
导套
Guide bush
HASCO Z1000W

C1510 1.45
导套
Guide bush
HASCO Z11

C1511 1.51
导套
Guide bush
HASCO Z1100W

C1513 1.55
导套
Guide bush
HASCO Z13W

C1514 1.56
导套
Guide bush
HASCO Z14W

C1700 1.57
钢珠导套
Steel ball guide bush
MEUSBURGER E1330

C1800 1.58
钢珠导套
Steel ball guide bush
HASCO Z12

C1850 1.59
钢珠导套
Steel ball guide bush
HASCO Z13

C1000

导柱

Guide pins

Mat：≈1.0401/690+70HV30

Compability:HASCO Z00

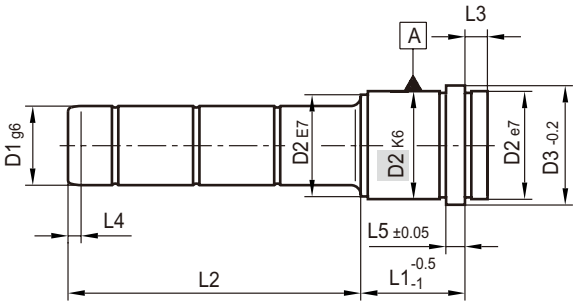

Code	L1	D1	L2	D2	D3	L3	L4	L5
C1000-9 -9- 20	9	9	20	14	16	3	4	3
			35					
			50					
C1000-12-9- 25	12		25					
			45					
			65					
C1000-17-9- 20	17		20					
			30					
			50					
			70					
C1000-22-9- 25	22		25					
			35					
			55					
			75					
			95					
C1000-27-9- 20	27		20					
			30					
			50					
			70					
			90					
C1000-36-9- 25	36		25					
			45					
			65					
			85					
C1000-46-9- 30	46		30					
			45					
			70					
C1000-56-9- 35	56		35					
			60					
C1000-66-9- 45	66		45					
C1000-9-10- 20	9	10	20					
			35					
			50					
C1000-12-10-25	12		25					
			45					
			65					
C1000-17-10-20	17		20					
			30					

Code	L1	D1	L2	D2	D3	L3	L4	L5
C1000-17-10- 50	17	10	50	14	16	3	4	3
			70					
C1000-22-10- 25	22		25					
			35					
			55					
			75					
			95					
C1000-27-10- 20	27		20					
			30					
			50					
			70					
			90					
C1000-36-10- 25	36		25					
			45					
			65					
			85					
C1000-46-10- 30	46		30					
			45					
			70					
C1000-56-10- 35	56		35					
			60					
C1000-66-10- 45	66		45					
C1000-17-14- 35	17	14	35	20	25	9	7	6
			55					
			75					
			95					
C1000-22-14- 30	22		30					
			50					
			70					
			90					
			110					
			125					
			150					
C1000-27-14- 30	27		30					
			45					
			65					
			85					
			105					

C1000

导柱
Guide pins
Mat：≈1.0401/690+70HV30
Compability:HASCO Z00

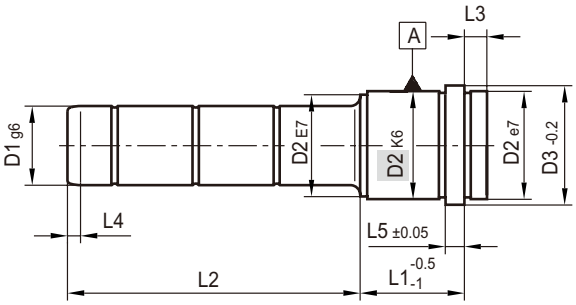

Code	L1	D1	L2	D3	D4	L3	L4	L5
C1000-27-14-125	27	14	125	20	25	9	7	6
			145					
			165					
C1000-36-14- 35	36		35					
			55					
			75					
			95					
			125					
			155					
C1000-46-14- 35	46		35					
			45					
			65					
			85					
			105					
			125					
			145					
C1000-56-14- 35	56		35					
			55					
			75					
			95					
			135					
C1000-66-14- 55	66		55					
			65					
			95					
			125					
C1000-76-14- 55	76		55					
			95					
C1000-86-14- 55	86		55					
			95					
C1000-96-14- 55	96		55					
			95					
C1000-116-14-75	116		75					
C1000-17-15- 35	17	15	35					
			55					
			75					
			95					
C1000-22-15- 30	22		30					
			50					

Code	L1	D1	L2	D3	D4	L3	L4	L5
C3000-22-15- 70	22	15	70	20	25	9	7	6
			90					
			110					
			125					
			150					
C3000-27-15- 30	27		30					
			45					
			65					
			85					
			105					
			125					
			145					
			165					
C3000-36-15- 35	36		35					
			55					
			75					
			95					
			125					
			155					
C3000-46-15- 35	46		35					
			45					
			65					
			85					
			105					
			125					
			145					
C3000-56-15- 35	56		35					
			55					
			75					
			95					
			135					
C3000-66-15- 55	66		55					
			65					
			95					
			125					
C3000-76-15- 55	76		55					
			95					
C3000-86-15- 55	86		55					

C1000

导柱

Guide pins

Mat : ≈1.0401/690+70HV30

Compability:HASCO Z00

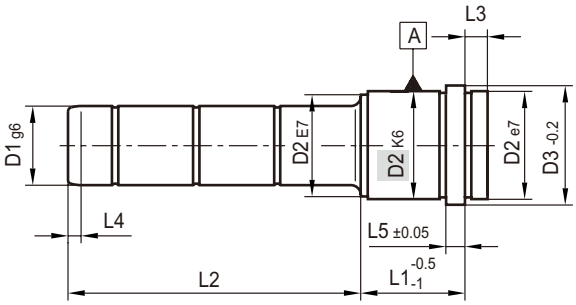

Code	L1	D1	L2	D2	D3	L3	L4	L5
C1000-86 -15-95	86	15	95	20	25	9	7	6
C1000-96 -15-55	96		55					
			95					
C1000-116-15-75	116		75					
C1000-17 -18-35	17	18	35	26	31			
			55					
			75					
			95					
			120					
C1000-22-18- 35	22		35					
			45					
			65					
			85					
			115					
			135					
C1000-27-18- 35	27		35					
			45					
			65					
			85					
			105					
			125					
			145					
			165					
			195					
			225					
			245					
C1000-36-18- 35	36		35					
			55					
			75					
			95					
			115					
			135					
			165					
			225					
			255					
C1000-46-18- 35	46		35					
			45					
			65					

Code	L1	D1	L2	D2	D3	L3	L4	L5
C1000-46 -18- 85	46	18	85	26	31	9	7	6
			105					
			135					
			165					
			245					
C1000-56 -18- 35	56		35					
			55					
			75					
			95					
			135					
			155					
C1000-66 -18- 35	66		35					
			55					
			75					
			95					
			145					
C1000-76 -18- 55	76		55					
			75					
			95					
			135					
C1000-86 -18- 55	86		55					
			75					
			95					
			125					
C1000-96 -18- 55	96		55					
			75					
			95					
			115					
			135					
C1000-116-18- 75	116		75					
			115					
C1000-136-18-135	136		135					
C1000-17 -20- 35	17	20	35					
			55					
			75					
			95					
			120					
C1000-22 -20- 35	22		35					

C1000

导柱
Guide pins
Mat：≈1.0401/690+70HV30
Compability:HASCO Z00

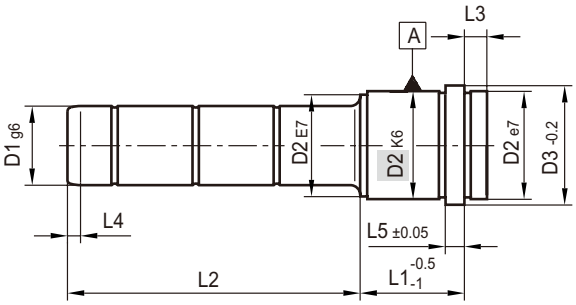

Code	L1	D1	L2	D2	D3	L3	L4	L5
C1000-22-20- 45	22	20	45	26	31	9	7	6
			65					
			85					
			115					
			135					
C1000-27-20- 35	27		35					
			45					
			65					
			85					
			105					
			125					
			145					
			165					
			195					
			225					
			245					
C1000-36-20- 35	36		35					
			55					
			75					
			95					
			115					
			135					
			165					
			225					
			255					
C1000-46-20- 35	46		35					
			45					
			65					
			85					
			105					
			135					
			165					
			245					
C1000-56-20- 35	56		35					
			55					
			75					
			95					
			135					

Code	L2	D1	L1	D2	D3	L3	L4	L5
C1000-56 -20-155	56	20	155	26	31	9	7	6
C1000-66 -20- 35	66		35					
			55					
			75					
			95					
			145					
C1000-76 -20- 55	76		55					
			75					
			95					
			135					
C1000-86 -20- 55	86		55					
			75					
			95					
			125					
C1000-96 -20- 55	96		55					
			75					
			95					
			115					
			135					
C1000-116-20- 75	116		75					
			115					
C1000-136-20-135	136		135					
C1000-17 -22- 35	17	22	35	30	35			
			55					
			75					
C1000-22 -22- 35	22		35					
			55					
			75					
			95					
			105					
			130					
C1000-27 -22- 35	27		35					
			45					
			65					
			85					
			105					
			125					
			165					

C1000

导柱
Guide pins
Mat：≈1.0401/690+70HV30
Compability:HASCO Z00

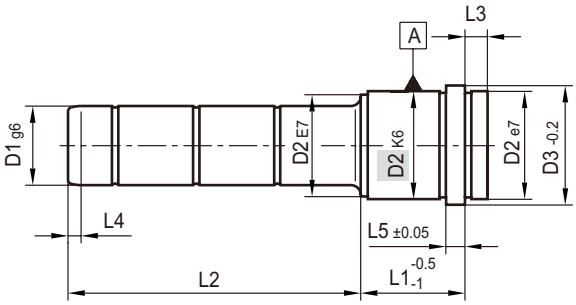

Code	L1	D1	L2	D2	D3	L3	L4	L5
C1000-27-22-205	27	22	205	30	35	9	7	6
			245					
			285					
C1000-36-22- 35	36		35					
			55					
			75					
			95					
			115					
			135					
			165					
			205					
			245					
			285					
C1000-46-22- 35	46		35					
			45					
			65					
			85					
			105					
			125					
			165					
			205					
			245					
C1000-56-22- 35	56		35					
			55					
			75					
			95					
			115					
			165					
			205					
C1000-66-22- 35	66		35					
			55					
			75					
			95					
			125					
			155					
			195					
C1000-76-22- 75	76		55					
			75					

Code	L1	D1	L2	D2	D3	L3	L4	L5
C1000-76 -22- 95	76	22	95	30	35	9	7	6
			115					
			145					
C1000-86 -22- 55	86		55					
			75					
			95					
			115					
			135					
			155					
			195					
C1000-96 -22- 55	96		55					
			75					
			95					
			125					
			155					
			195					
C1000-116 -22- 75	116		75					
			95					
			115					
			135					
			155					
			195					
C1000-136 -22- 95	136		95					
			115					
			135					
			155					
C1000-156-22-115	156		115					
			155					
C1000-17 -24- 35	17	24	35					
			55					
			75					
C1000-22 -24- 35	22		35					
			55					
			75					
			95					
			105					
			130					
C1000-27 -24- 35	27		35					

C1000

导柱

Guide pins

Mat：≈1.0401/690+70HV30

Compability:HASCO Z00

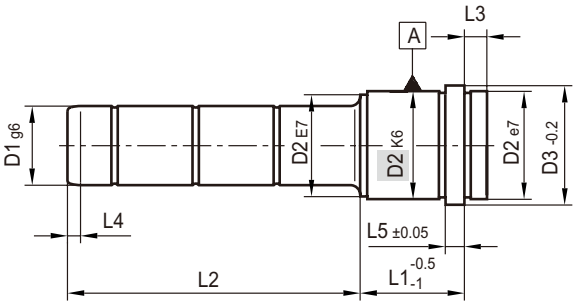

Code	L1	D1	L2	D2	D3	L3	L4	L5
C1000-27-24-45	27	24	45	30	35	9	7	6
			65					
			85					
			105					
			125					
			165					
			205					
			245					
			285					
C1000-36-24-35	36		35					
			55					
			75					
			95					
			115					
			135					
			165					
			205					
			245					
			285					
C1000-46-24-35	46		35					
			45					
			65					
			85					
			105					
			125					
			165					
			205					
			245					
C1000-56-24-35	56		35					
			55					
			75					
			95					
			115					
			165					
			205					
C1000-66-24-35	66		35					
			55					
			75					

Code	L1	D1	L2	D2	D3	L3	L4	L5
C1000-66 -24- 95	66	24	95	30	35	9	7	6
			125					
			155					
			195					
C1000-76 -24- 55	76		55					
			75					
			95					
			115					
			145					
C1000-86 -24- 55	86		55					
			75					
			95					
			115					
			135					
			155					
			195					
C1000-96 -24- 55	96		55					
			75					
			95					
			125					
			155					
			195					
C1000-116-24- 75	116		75					
			95					
			115					
			135					
			155					
			195					
C1000-136-24- 95	136		95					
			115					
			135					
			155					
C1000-156-24-115	156		115					
			155					
C1000-22 -30- 35	22	30	35	42	47			
			75					
			130					
C1000-27 -30- 45	27		45					

C1000

导柱

Guide pins

Mat : ≈1.0401/690+70HV30

Compability:HASCO Z00

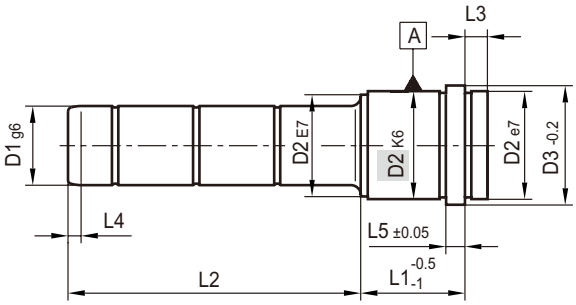

Code	L1	D1	L2	D2	D3	L3	L4	L5
C1000-27-30- 65	27	30	65	42	47	9	7	6
			105					
			165					
			185					
			245					
			285					
C1000-36-30- 55	36		55					
			75					
			95					
			115					
			155					
			205					
			245					
			285					
C1000-46-30- 45	46		45					
			65					
			85					
			105					
			125					
			165					
			205					
			245					
			285					
C1000-56-30- 55	56		55					
			75					
			95					
			115					
			135					
			175					
			205					
			245					
			295					
C1000-66-30- 55	66		55					
			75					
			95					
			115					
			135					
			175					

Code	L1	D1	L2	D2	D3	L3	L4	L5
C1000-66 -30-205	66	30	205	42	47	9	7	6
			245					
			295					
C1000-76 -30- 55	76		55					
			75					
			95					
			115					
			155					
			225					
C1000-86 -30- 55	86		55					
			75					
			95					
			115					
			155					
			195					
			225					
C1000-96 -30- 55	96		55					
			75					
			95					
			115					
			155					
			175					
			205					
C1000-116-30- 75	116		75					
			95					
			115					
			155					
			195					
C1000-136-30- 95	136		95					
			115					
			155					
			195					
C1000-156-30- 95	156		95					
			115					
			155					
C1000-176-30-135	176		135					
			175					
C1000-196-30-115	196		115					

C1000

导柱

Guide pins

Mat：≈1.0401/690+70HV30

Compability:HASCO Z00

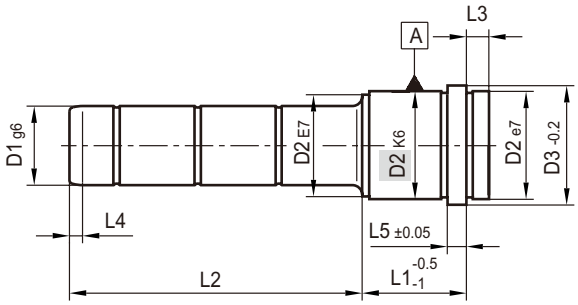

Code	L1	D1	L2	D2	D3	L3	L4	L5
C1000-196-30-155	196	30	155	42	47	9	7	6
			195					
C1000-22 -32- 35	22	32	35					
			75					
			130					
C1000-27 -32- 45	27		45					
			65					
			105					
			165					
			185					
			245					
			285					
C1000-36 -32- 55	36		55					
			75					
			95					
			115					
			155					
			205					
			245					
			285					
C1000-46 -32- 45	46		45					
			65					
			85					
			105					
			125					
			165					
			205					
			245					
			285					
C1000-56 -32- 55	56		55					
			75					
			95					
			115					
			135					
			175					
			205					
			245					
			295					

Code	L2	D1	L1	D2	D3	L3	L4	L5
C1000-66 -32- 55	66	32	55	42	47	9	7	6
			75					
			95					
			115					
			135					
			175					
			205					
			245					
			295					
C1000-76 -32- 55	76		55					
			75					
			95					
			115					
			155					
			225					
C1000-86 -32- 55	86		55					
			75					
			95					
			115					
			155					
			195					
			225					
C1000-96 -32- 55	96		55					
			75					
			95					
			115					
			155					
			175					
			205					
C1000-116-32- 75	116		75					
			95					
			115					
			155					
			195					
C1000-136-32- 95	136		95					
			115					
			155					
			195					

C1000

导柱

Guide pins

Mat : ≈1.0401/690+70HV30

Compability:HASCO Z00

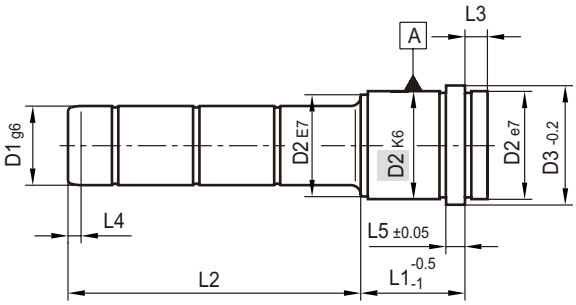

Code	L1	D1	L2	D2	D3	L3	L4	L5
C1000-156-32- 95	156	32	95	42	47	9	7	6
			115					
			155					
C1000-176-32-135	176		135					
			175					
C1000-196-32-115	196		115					
			155					
			195					
C1000-36 -40- 75	36	40	75	54	60	12	10	10
			135					
C1000-46 -40- 95	46		95					
			165					
C1000-56 -40- 75	56		75					
			115					
			155					
			195					
C1000-66 -40- 75	66		75					
			135					
C1000-76 -40- 75	76		75					
			95					
			115					
			135					
			175					
C1000-86 -40- 75	86		75					
			135					
C1000-96 -40- 75	96		75					
			95					
			115					
			155					
			195					
C1000-116-40- 95	116		95					
			115					
			135					
			155					
			195					
C1000-136-40- 95	136		95					
			115					
			135					

Code	L2	D1	L1	D2	D3	L3	L4	L5
C1000-136-40-155	136	40	155	54	60	12	10	10
			195					
			215					
C1000-156-40-115	156		115					
			155					
			215					
C1000-176-40-135	176		135					
			155					
			175					
C1000-196-40-115	196		115					
			155					
			195					
			235					
C1000-246-40-165	246		165					
			215					
			245					
C1000-36 -42- 75	36	42	75					
			135					
C1000-46 -42- 95	46		95					
			165					
C1000-56 -42- 75	56		75					
			115					
			155					
			195					
C1000-66 -42- 75	66		75					
			135					
C1000-76 -42- 75	76		75					
			95					
			115					
			135					
			175					
C1000-86 -42- 75	86		75					
			135					
C1000-96 -42- 75	96		75					
			95					
			115					
			155					
			195					

C1000

导柱
Guide pins
Mat：≈1.0401/690+70HV30
Compability:HASCO Z00

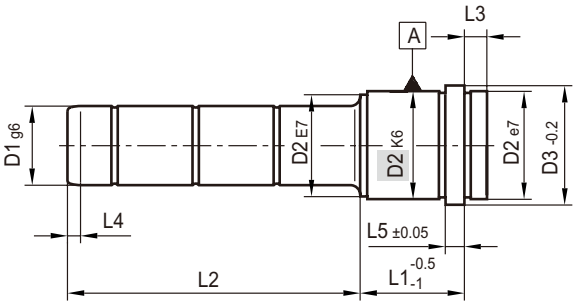

Code	L2	D1	L1	D2	D3	L3	L4	L5
C1000-116-42- 95	116	42	95	54	60	12	10	10
			115					
			135					
			155					
			195					
C1000-136-42- 95	136		95					
			115					
			135					
			155					
			195					
			215					
C1000-156-42- 115	156		115					
			155					
			215					
C1000-176-42-135	176		135					
			155					
			175					
C1000-196-42-115	196		115					
			155					
			195					
			235					
C1000-246-42-165	246		165					
			215					
			245					
C1000-76 -50- 95	76	50	95	66	71			
			115					
			135					
			175					
C1000-86 -50- 95	86		95					
			115					
			135					
C1000-96 -50- 95	96		95					
			115					
			155					
			195					
C1000-116-50-115	116		115					
			155					
			195					

Code	L2	D1	L1	D2	D3	L3	L4	L5
C1000-136-50-115	136	50	115	66	71	12	10	10
			155					
			195					
C1000-156-50-135	156		135					
			155					
			195					
C1000-176-50-195	176		195					
			235					
C1000-196 -50-195	196		195					
			235					
C1000-76 -52- 95	76	52	95					
			115					
			135					
			175					
C1000-86 -52- 95	86		95					
			115					
			135					
C1000-96 -52- 95	96		95					
			115					
			155					
			195					
C1000-116-52-115	116		115					
			155					
			195					
C1000-136-52-115	136		115					
			155					
			195					
C1000-156-52-135	156		135					
			155					
			195					
C1000-176-52-195	176		195					
			235					
C1000-196-52-195	196		195					
			235					

C1001

导柱
Guide pins
Mat：≈1.0401/70HV30
Compability:HASCO Z01

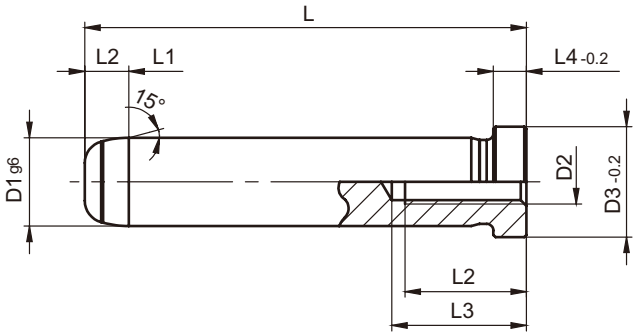

Code	D1	L	D2	D3	L1	L2	L3	L4
C1001-8 - 40	8	40	M4	10	4	8	12	3
		50						
		60						
		70						
		80						
		90						
		100						
		120						
C1001-9 - 40	9	40	M5	12		10	15	
		60						
		70						
		80						
		90						
		100						
		120						
C1001-10- 40	10	40	M6					
		50						
		60						
		70						
		80						
		90						
		100						
		120						
		140						
C1001-12- 40	12	40		16	7	12	17	6
		60						

Code	D1	L	D2	D3	L1	L2	L3	L4
C1001-12- 70	12	70	M6	16	7	12	17	6
		80						
		90						
		100						
		110						
		120						
		140						
		160						
		180						
C1001-14- 60	14	60		18				8
		70						
		80						
		90						
		100						
		110						
		120						
		140						
		160						
		180						
		200						
C1001-15- 60	15	60	M8			16	22	
		80						
		100						
		120						
		140						
		160						

C1001

导柱

Guide pins

Mat：≈1.0401/70HV30

Compability:HASCO Z01

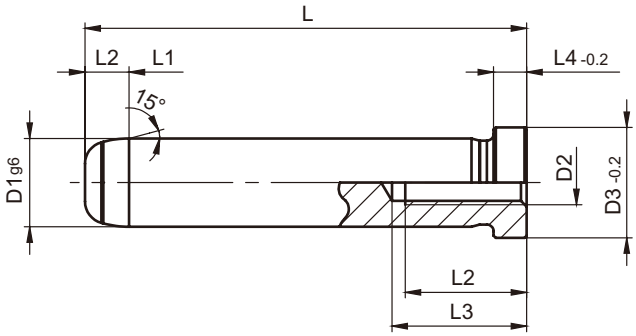

Code	D1	L	D2	D3	L1	L2	L3	L4
C1001-15-180	15	180	M 8	18	7	16	22	8
C1001-16- 40	16	40		20				
		60						
		70				15		
		80				16		
		90				15		
		100				16		
		110				15		
		120				16		
		140						
		160						
		180						
		200						
		220				15		
		240						
C1001-18- 60	18	60	M10	22		20	27	
		70						
		80						
		90						
		100						
		110						
		120						
		140						
		160						
		180						
		200						

Code	D1	L	D2	D3	L1	L2	L3	L4
C1001-18-220	18	220	M10	22	7	20	27	8
		240						
		260						
		280						
C1001-20- 60	20	60		24				
		80						
		90						
		100						
		110						
		120						
		140						
		160						
		180						
		200						
		220						
		240						
		260						
		280						
		300						
		320						
C1001-22- 80	22	80		26				15
		100						
		120						
		140						
		160						
		180						

C1001

导柱
Guide pins
Mat：≈1.0401/70HV30
Compability:HASCO Z01

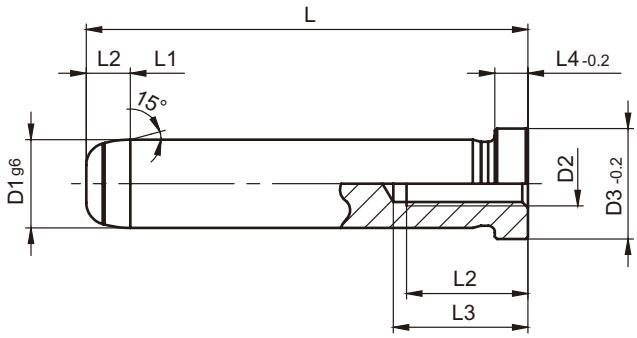

Code	D1	L	D2	D3	L1	L2	L3	L4
C1001-22-200	22	200	M10	26	7	20	27	15
		220						
		240						
		260						
		280						
		300						
		320						
C1001-24- 80	24	80	M12	28		24	32	
		100						
		120						
		140						
		160						
		180						
		200						
		220						
		240						
		260						
		280						
		300						
		320						
C1001-30-100	30	100	M16	36		32	41	
		120						
		160						
		180						
		200						
		220						

Code	D1	L	D2	D3	L1	L2	L3	L4
C1001-30-240	30	240	M16	36	7	32	41	15
		260						
		280						
		300						
		320						
		360						
		400						
C1001-32-100	32	100						
		120						
		160						
		200						
		240						
		300						
		360						
C1001-40-160	40	160		48	10			
		200						
		240						
		300						
		360						
		400						
C1001-50-160	50	160		58				
		200						
		240						
		300						
		360						

C1002

导柱
Guide pins
Mat：≈1.0401
Compability:HASCO Z010

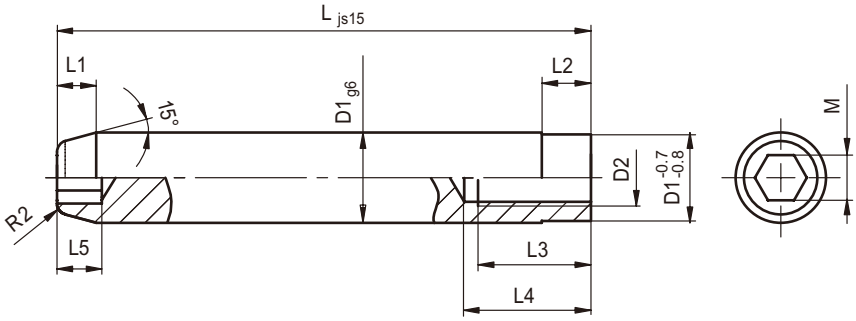

Code	D1	L	D2	L1	L2	L3	L4	L5	M
C1002-10- 60	10	60	M 6	10	15	4	5	5	5
		80							
		100							
C1002-12- 60	12	60				7			
		80							
		100							
		120							
C1002-14- 50	14	50							
		60							
		67							
		70							
		75							
		80							
		90							
		100							
C1002-15- 50	15	50	M 8					6	
		60							
		70							
		80							
		90							
C1002-16- 80	16	80		12	18		5.5		8
		90							
		100							
		118							
		120							
		132							
		140							
		160							
C1002-18- 60	18	60	M10	15	22		6	8	
		70							
		80							
		90							
		100							
		125							
		140							
		150							
		170							
		200							

Code	D1	L	D2	L1	L2	L3	L4	L5	M
C1002-20- 60	20	60	M10	15	22	7	7	8	8
		70							
		80							
		90							
		100							
		120							
		140							
		150							
		160							
		170							
		180							
		190							
		210							
C1002-22- 70	22	70							
		80							
		90							
		100							
		120							
C1002-24- 70	24	70	M12	18	25			10	10
		80							
		90							
		100							
		120							
		140							
		160							
		180							
		200							
		220							
C1002-30- 80	30	80	M16					14	14
		90							
		100							
		120							
		140							
C1002-32- 80	32	80							
		90							
		100							
		120							
		140							

C1004

斜导柱

Angle guide pins

Mat : ≈1.0401/70HV30

Compability:HASCO Z011

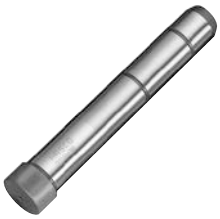

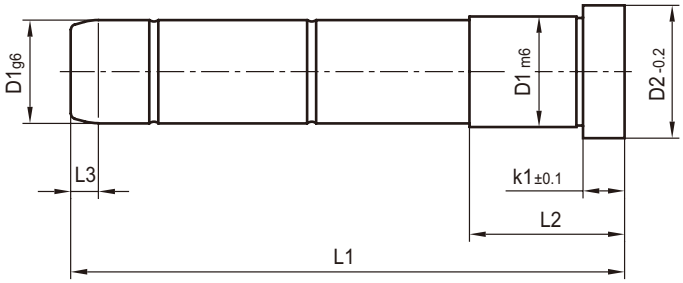

Code	D1	L1	D3	L2	L3	K1
C1004-10-40	10	40	12	17	4	3
		60				
		80		22		
		100		27		
C1004-12-60	12	60	16	17	7	6
		80		22		
		100		27		
		120		36		
		140				
		160				
C1004-14-60	14	60	18	17		8
		80		22		
		100		27		
		120		36		
		140		46		
		160				
C1004-16-60	16	60	20	22		
		80		27		
		100				
		120		36		
		140		46		
		160				

Code	D1	L1	D3	L2	L3	K1
C1004-18- 80	18	80	22	27	7	8
		100				
		120		36		
		140		46		
		160				
		180		56		
		200				
		220				
C1004-20- 80	20	80	24	27		
		100				
		120		36		
		140		46		
		160				
		180		56		
		200				
		220				
C1004-22-100	22	100	26	36		15
		120		46		
		140				
		160		56		
		180				
		200		76		

C1004

斜导柱

Angle guide pins

Mat：≈1.0401/70HV30

Compability:HASCO Z011

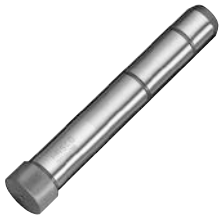

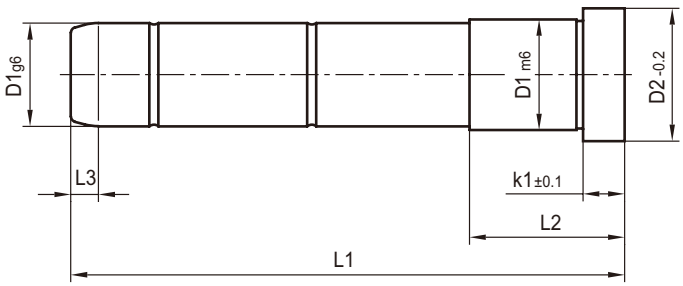

Code	D1	L1	D2	L2	L3	K1
C1004-22-220	22	220	26	76	7	15
		240				
		280				
C1004-24-100	24	100	28	36		
		120		46		
		140				
		160		56		
		180				
		200		76		
		220				
		240				
		280				
C1004-30-120	30	120	36	56		
		140				
		160				
		180				
		200				
		220		76		
		240				
		280				
		320				
		360				

Code	D1	L1	D2	L2	L3	K1
C1004-32-120	32	120	36	56	7	15
		140				
		160				
		180				
		200				
		220				
		240		76		
		280				
		320				
		360				
C1004-40-200	40	200	48	56	10	
		240		76		
		300		96		
		360				
C1004-50-200	50	200	58	56		
		240		76		
		300		96		
C1004-60-240	60	240	68	76	12	20
		300		96		
		360		116		

C1006

导柱
Guide pins
Mat : ≈1.0501
Compability:HASCO Z013

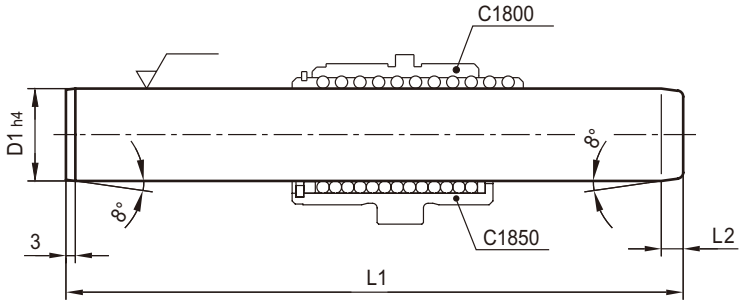

Code	D1	L1	L2
C1004-12-100	12	100	6
		125	
C1004-18-125	18	125	
		160	

Code	D1	L1	L2
C1004-30-160	30	160	7
C1004-30-240		240	

C1007

斜导柱

Angle guide pins

Mat：≈1.0401 / 720 HV30

Compability:HASCO Z016

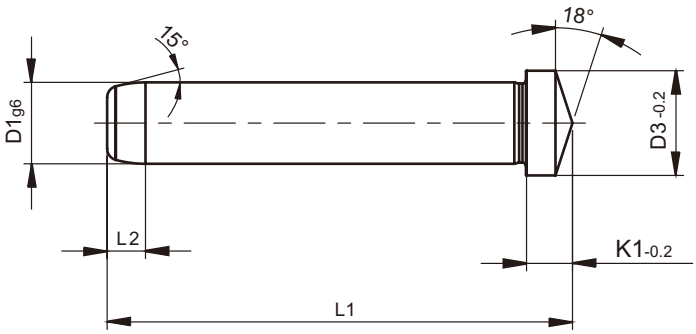

Code	D1	L1	D2	L2	K1
C1007- 8-40	8	40	10	4	3
		50			
		60			
		80			
		100			
C1007-10-40	10	40	12		
		60			
		80			
		100			
		120			
C1007-12-60	12	60	16	7	6
		80			
		100			
		120			
		140			
		160			
C1007-14-60	14	60	18		8
		80			
		100			
		120			
		140			
		160			

Code	D1	L1	D2	L2	K1
C1007-16-100	16	100	20	7	8
		120			
		140			
		160			
		180			
		200			
C1007-18-100	18	100	22		
		120			
		140			
		160			
		180			
		200			
		240			
C1007-20-100	20	100	24		
		120			
		140			
		160			
		180			
		200			
		240			

C1010

导柱

Guide pins

Mat：≈1.0401 / 720 HV30

Compability:HASCO Z02

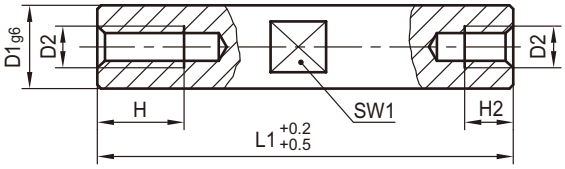

Code	D1	L1	D2	H	H1	SW1
C1010-10-60	10	60	M 6	16	9	9
		70				
		80				
		100				
		120				
		140				
		160		9	16	
C1010-14-60	14	60	M 8	16	11	12
		70				
		80				
		100				
		120				
		140				
		160				
		180				
		200		11	16	
		300				
C1010-18-70	18	70	M10	12	20	14

Code	D1	L1	D2	H	H1	SW1
C1010-18-80	18	80	M10	12	20	14
		100		20	12	
		120				
		140				
		160				
		180				
		200				
		220				
		240				
		340		12	20	
C1010-20-70	20	70	M12	14	25	16
		80				
		100		25	14	
		120				
		140				
		160				
		180				
		200				

C1010

导柱

Guide pins

Mat：≈1.0401 / 720 HV30

Compability:HASCO Z02

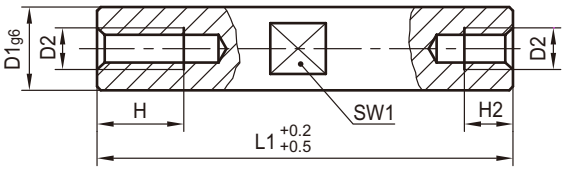

Code	D1	L1	D2	H	H1	SW1
C1010-20-220	20	220	M12	25	14	16
		240				
		340		14	25	19
C1010-24- 70	24	70				
		80				
		100				
		120		25	14	
		140				
		160				
		180				
		200				
		220		14	25	
		240		25	14	
		260		14	25	
		380				
C1010-30-100	30	100	M16	16	30	24
		120				
		140				

Code	D1	L1	D2	H	H1	SW1
C1010-30-160	30	160	M16	16	30	24
		180		30	16	
		200		16	30	
		220		30	16	
		260				
		300				
		340		16	30	
C1010-40-160	40	160	M20	20	40	36
		180				
		200				
		220				
		240				
		260				
		300				
		340				
		380				

C1011

导柱

Guide pins

Mat：≈1.0401 / 690+70 HV30

Compability:HASCO Z03

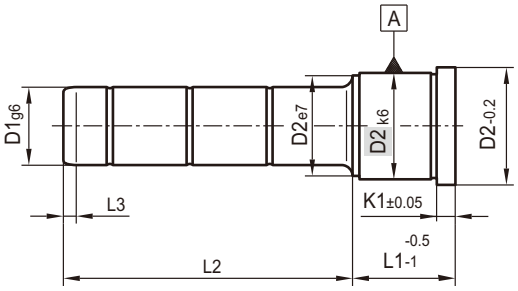

Code	L1	D1	L2	D2	D3	L3	K1
C1011- 9- 9-20	9	9	20	14	16	4	3
			35				
			50				
C1011-12- 9-25	12		25				
			45				
			65				
C1011-17- 9-20	17		20				
			30				
C1011-22- 9-25	22		25				
			35				
			55				
C1011-27- 9-30	27		30				
			50				
C1011-36- 9-25	36		25				
			45				
C1011-46- 9-30	46		30				
			45				
			75				
C1011-56- 9-35	56		35				
			60				
C1011-66- 9-45	66		45				
C1011- 9-10-20	9	10	20				
			35				
			50				
C1011-12-10-25	12		25				
			45				
			65				
C1011-17-10-20	17		20				
			30				
C1011-22-10-25	22		25				
			35				
			55				
C1011-27-10-30	27		30				
			50				
C1011-36-10-25	36		25				
			45				
C1011-46-10-30	46		30				
			45				
			75				

Code	L1	D1	L2	D2	D3	L3	K1
C1011-56-10-35	56	10	35	14	16	4	3
			60				
C1011-66-10-45	66		45				
C1011-17-14-35	17	14	35	20	25	7	6
			55				
			75				
			95				
C1011-22-14-20	22		20				
			35				
			40				
			45				
			50				
			55				
			65				
			70				
			90				
			110				
C1011-27-14-20	27		20				
			35				
			40				
			45				
			55				
			65				
			85				
			105				
C1011-36-14-20	36		20				
			35				
			40				
			45				
			55				
			65				
			75				
			95				
C1011-46-14-20	46		20				
			35				
			45				
			65				
			85				
			105				

C1011

导柱

Guide pins

Mat：≈1.0401 / 690+70 HV30

Compability:HASCO Z03

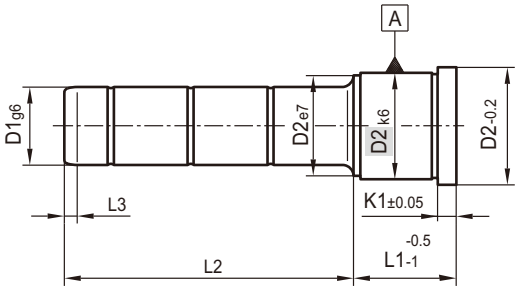

Code	L1	D1	L2	D2	D3	L3	K1
C1011- 56-14-20	56	14	20	20	25	7	6
			35				
			55				
			75				
			95				
C1011- 66-14-55	66		55				
			65				
			95				
C1011- 76-14-55	76		55				
			95				
C1011- 86-14-55	86		55				
			95				
C1011- 96-14-55	96		55				
			95				
C1011-116-14-75	116		75				
C1011- 17-15-35	17	15	35				
			55				
			75				
			95				
C1011- 22-15-20	22		20				
			35				
			40				
			45				
			50				
			55				
			65				
			70				
			90				
			110				
C1011- 27-15-20	27		20				
			35				
			40				
			45				
			55				
			65				
			85				
			105				
C1011- 36-15-20	36		20				
			35				

Code	L1	D1	L2	D2	D3	L3	K1
C1011- 36-15-40	36	15	40	20	25	7	6
			45				
			55				
			65				
			75				
			95				
C1011- 46-15-20	46		20				
			35				
			45				
			65				
			85				
			105				
C1011- 56-15-20	56		20				
			35				
			55				
			75				
			95				
C1011- 66-15-55	66		55				
			65				
			95				
C1011- 76-15-55	76		55				
			95				
C1011- 86-15-55	86		55				
			95				
C1011- 96-15-55	96		55				
			95				
C1011-116-15-75	116		75				
C1011- 17-18-35	17	18	35	26	31		
			55				
			75				
			95				
C1011- 22-18-20	22		20				
			35				
			40				
			45				
			50				
			55				
			60				
			65				

C1011

导柱

Guide pins

Mat：≈1.0401 / 690+70 HV30

Compability:HASCO Z03

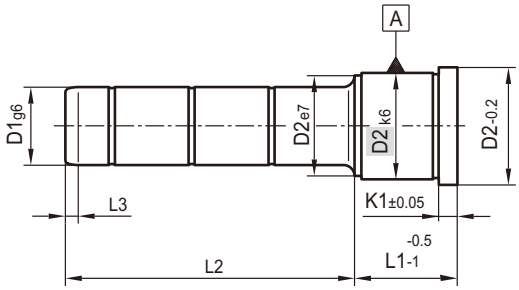

Code	L1	D1	L2	D2	D3	L3	K1
C1011-22-18-70	22	18	70	26	31	7	6
			80				
			85				
			115				
C1011-27-18-20	27		20				
			35				
			40				
			45				
			50				
			55				
			60				
			65				
			70				
			80				
			85				
			105				
			125				
			155				
C1011-36-18-20	36		20				
			35				
			40				
			45				
			50				
			55				
			60				
			65				
			70				
			75				
			80				
			95				
			115				
			135				
			155				
C1011-46-18-20	46		20				
			45				
			65				
			85				
			105				
			135				

Code	L1	D1	L2	D2	D3	L3	K1
C1011- 46-18-165	46	18	165	26	31	7	6
C1011- 56-18- 20	56		20				
			35				
			55				
			75				
			95				
C1011- 66-18- 55	66		55				
			75				
			95				
C1011- 76-18- 55	76		55				
			75				
			95				
C1011- 86-18- 55	86		55				
			75				
			95				
C1011- 96-18- 55	96		55				
			95				
C1011-116-18-115	116		115				
C1011-136-18-135	136		135				
C1011- 17-20- 35	17	20	35				
			55				
			75				
			95				
C1011- 22-20- 20	22		20				
			35				
			40				
			45				
			50				
			55				
			60				
			65				
			70				
			80				
			85				
			115				
C1011- 27-20- 20	27		20				
			35				
			40				
			45				

C1011

导柱

Guide pins

Mat：≈1.0401 / 690+70 HV30

Compability:HASCO Z03

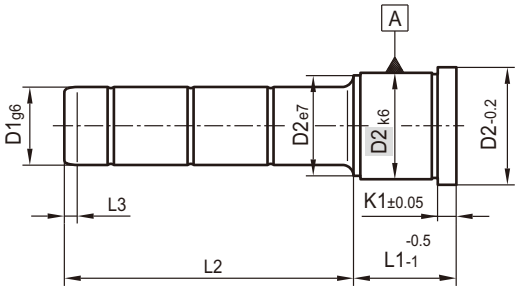

Code	L1	D1	L2	D2	D3	L3	K1
C1011-27-20-50	27	20	50	26	31	7	6
			55				
			60				
			65				
			70				
			80				
			85				
			105				
			125				
			155				
C1011-36-20-20	36		20				
			35				
			40				
			45				
			50				
			55				
			60				
			65				
			70				
			75				
			80				
			95				
			115				
			135				
			155				
C1011-46-20-20	46		20				
			45				
			65				
			85				
			105				
			135				
			165				
C1011-56-20-20	56		20				
			35				
			55				
			75				
			95				
C1011-66-20-55	66		55				
			75				

Code	L1	D1	L2	D2	D3	L3	K1
C1011- 66-20- 95	66	20	95	26	31	7	6
C1011- 76-20- 55	76		55				
			75				
			95				
C1011- 86-20- 55	86		55				
			75				
			95				
C1011- 96-20- 55	96		55				
			95				
C1011-116-20-115	116		115				
C1011-136-20-135	136		135				
C1011- 17-22- 35	17	22	35	30	35		
			55				
			75				
C1011- 22-22- 35	22		35				
			55				
			75				
			105				
			130				
C1011- 27-22- 25	27		25				
			45				
			50				
			60				
			65				
			70				
			80				
			85				
			105				
			125				
			165				
C1011- 36-22- 25	36		25				
			45				
			50				
			55				
			60				
			70				
			75				
			80				
			95				

C1011

导柱

Guide pins

Mat：≈1.0401 / 690+70 HV30

Compability:HASCO Z03

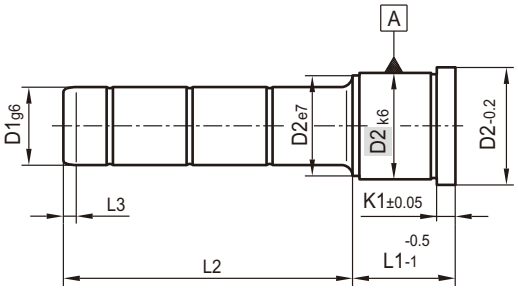

Code	L1	D1	L2	D2	D3	L3	K1
C1011-36-22-115	36	22	115	30	35	7	6
			135				
			165				
			195				
C1011-46-22- 25	46		25				
			45				
			50				
			60				
			65				
			70				
			80				
			85				
			105				
			115				
			125				
			165				
			195				
C1011-56-22- 25	56		25				
			45				
			55				
			75				
			95				
			115				
			165				
			195				
C1011-66-22- 55	66		55				
			75				
			95				
C1011-76-22- 25	76		25				
			45				
			55				
			75				
			95				
			115				
C1011-86-22- 55	86		55				
			75				
			95				
C1011-96-22- 75	96		55				
			75				

Code	L1	D1	L2	D2	D3	L3	K1
C1011- 96-22- 95	96	22	95	30	35	7	6
			115				
			135				
			155				
C1011-116-22- 75	116		75				
			115				
			155				
C1011-136-22-135	136		135				
C1011-156-22-155	156		155				
C1011- 17-24- 35	17	24	35				
			55				
			75				
C1011- 22-24- 35	22		35				
			55				
			75				
			105				
			130				
C1011- 27-24- 25	27		25				
			45				
			50				
			60				
			65				
			70				
			80				
			85				
			105				
			125				
			165				
C1011- 36-24- 25	36		25				
			45				
			50				
			55				
			60				
			70				
			75				
			80				
			95				
			115				
			135				

C1011

导柱

Guide pins

Mat：≈1.0401 / 690+70 HV30

Compability:HASCO Z03

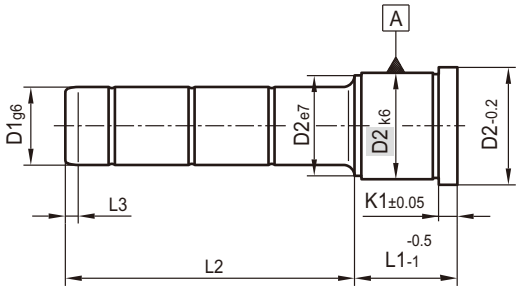

Code	L1	D1	L2	D2	D3	L3	K1
C1011-36-24-165	36	24	165	30	35	7	6
			195				
C1011-46-24- 25	46		25				
			45				
			50				
			60				
			65				
			70				
			80				
			85				
			105				
			115				
			125				
			165				
			195				
C1011-56-24- 25	56		25				
			45				
			55				
			75				
			95				
			115				
			165				
			195				
C1011-66-24- 55	66		55				
			75				
			95				
C1011-76-24- 25	76		25				
			45				
			55				
			75				
			95				
			115				
C1011-86-24- 55	86		55				
			75				
			95				
C1011-96-24- 55	96		55				
			75				
			95				
			115				

Code	L1	D1	L2	D2	D3	L3	K1
C1011- 96-24-135	96	24	135	30	35	7	6
			155				
C1011-116-24- 75	116		75				
			115				
			155				
C1011-136-24-135	136		135				
C1011-156-24-155	156		155				
C1011- 22-30- 35	22	30	35	42	47		
			75				
			130				
C1011- 27-30- 45	27		45				
			65				
			105				
			165				
C1011- 36-30- 55	36		55				
			75				
			95				
			115				
			155				
C1011- 46-30- 45	46		45				
			65				
			85				
			105				
			125				
			165				
			195				
C1011- 56-30- 55	56		55				
			75				
			95				
			115				
			135				
			175				
			195				
C1011- 66-30- 55	66		55				
			75				
			95				
			115				
			135				
			175				

C1011

导柱

Guide pins

Mat：≈1.0401 / 690+70 HV30

Compability:HASCO Z03

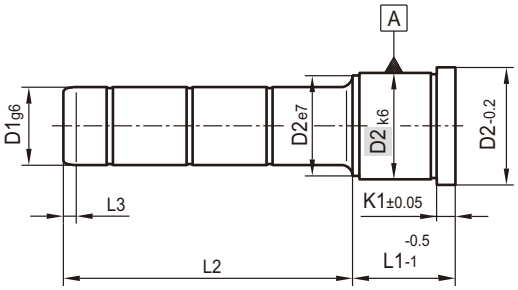

Code	L1	D1	L2	D2	D3	L3	K1
C1011- 66-30-195	66	30	195	42	47	7	6
C1011- 76-30- 55	76		55				
			75				
			95				
			115				
			155				
			195				
C1011- 86-30- 55	86		55				
			75				
			95				
			115				
			155				
C1011- 96-30- 55	96		55				
			75				
			95				
			115				
			155				
			195				
C1011-116-30- 75	116		75				
			95				
			115				
			155				
C1011-136-30- 95	136		95				
			115				
			155				
C1011-156-30-115	156		115				
			155				
C1011-176-30-135	176		135				
			175				
C1011-196-30-155	196		155				
			195				
C1011- 22-32- 35	22	32	35				
			75				
			130				
C1011- 27-32- 45	27		45				
			65				
			105				
			165				
C1011- 36-32- 55	36		55				

Code	L1	D1	L2	D2	D3	L3	K1
C1011-36-32-75	36	32	75	42	47	7	6
			95				
			115				
			155				
C1011-46-32-45	46		45				
			65				
			85				
			105				
			125				
			165				
			195				
C1011-56-32-55	56		55				
			75				
			95				
			115				
			135				
			175				
			195				
C1011-66-32-55	66		55				
			75				
			95				
			115				
			135				
			175				
			195				
C1011-76-32-55	76		55				
			75				
			95				
			115				
			155				
			195				
C1011-86-32-55	86		55				
			75				
			95				
			115				
			155				
C1011-96-32-55	96		55				
			75				
			95				

C1011

导柱

Guide pins

Mat：≈1.0401 / 690+70 HV30

Compability:HASCO Z03

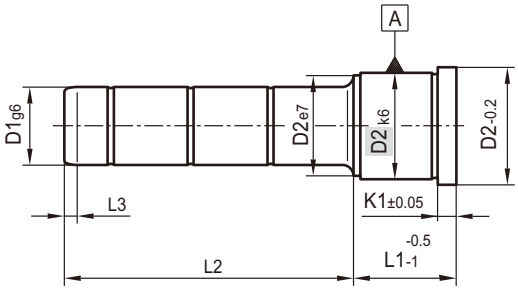

Code	L1	D1	L2	D2	D3	L3	K1
C1011- 96-32-115	96	32	115	42	47	7	6
			155				
			195				
C1011-116-32- 75	116		75				
			95				
			115				
			155				
C1011-136-32- 95	136		95				
			115				
			155				
C1011-156-32-115	156		115				
			155				
C1011-176-32-135	176		135				
			175				
C1011-196-32-115	196		155				
			195				
C1011- 36-40- 75	36	40	75	54	60	10	10
			135				
C1011- 46-40- 95	46		95				
			165				
C1011- 56-40- 75	56		75				
			115				
			155				
			195				
C1011- 66-40- 75	66		75				
			135				
C1011- 76-40- 75	76		75				
			115				
			175				
C1011- 86-40- 75	86		75				
			135				
C1011- 96-40- 75	96		75				
			115				
			155				
C1011-116-40- 95	116		95				
			115				
			135				
			195				
C1011-136-40- 95	136		95				

Code	L1	D1	L2	D2	D3	L3	K1
C1011-136-40-115	136	40	115	54	60	10	10
			135				
			215				
C1011-156-40-115	156		115				
			155				
			195				
			215				
C1011-176-40-135	176		135				
			155				
			175				
C1011-196-40-155	196		155				
			195				
			235				
C1011- 36-42- 75	36	42	75				
			135				
C1011- 46-42- 95	46		95				
			165				
C1011- 56-42- 75	56		75				
			115				
			155				
			195				
C1011- 66-42- 75	66		75				
			135				
C1011- 76-42- 75	76		75				
			115				
			175				
C1011- 86-42- 75	86		75				
			135				
C1011- 96-42- 75	96		75				
			115				
			155				
C1011-116-42- 95	116		95				
			115				
			135				
			195				
C1011-136-42- 95	136		95				
			115				
			135				
			215				

C1011

导柱

Guide pins

Mat：≈1.0401 / 690+70 HV30

Compability:HASCO Z03

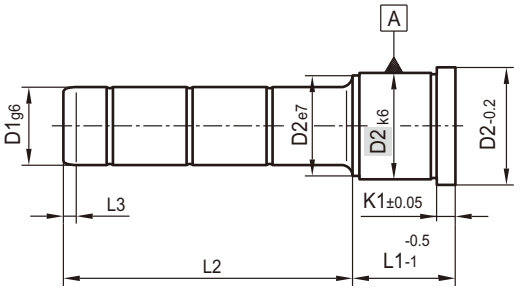

Code	L1	D1	L2	D2	D3	L3	K1
C1011-156-42-115	156	42	115	54	60	10	10
			155				
			195				
			215				
C1011-176-42-135	176		135				
			155				
			175				
C1011-196-42-155	196		155				
			195				
			235				
C1011- 76-50-115	76	50	115	66	72		
			135				
			155				
			175				
			195				
C1011- 96-50-115	96		115				
			155				
			175				
			195				
C1011-116-50-135	116		135				
			155				
			175				
			195				
C1011-136-50-135	136		135				
			155				
			175				
			195				
C1011-156-50-155	156		155				
			175				
			195				
			215				
C1011-196-50-175	196		175				
			195				
			215				
			245				
C1011-246-50-195	246		195				
			215				
			245				
C1011- 76-52-115	76	52	115				

Code	L1	D1	L2	D2	D3	L3	K1
C1011- 76-52-135	76	52	135	66	72	10	10
			155				
			175				
			195				
C1011- 96-52-115	96		115				
			155				
			175				
			195				
C1011-116-52-135	116		135				
			155				
			175				
			195				
C1011-136-52-135	136		135				
			155				
			175				
			195				
C1011-156-52-155	156		155				
			175				
			195				
			215				
C1011-196-52-175	196		175				
			195				
			215				
			245				
C1011-246-52-195	246		195				
			215				
			245				
C1011- 96-60-115	96	60	115	80	86		20
C1011-116-60-135	116		135				
C1011-136-60-135	136		135				
C1011-156-60-155	156		155				
C1011-196-60-175	196		175				
C1011-246-60-195	246		195				

C1012

导柱

Guide pins

Mat：≈1.0401 / 690+70 HV30

Compability:HASCO Z04

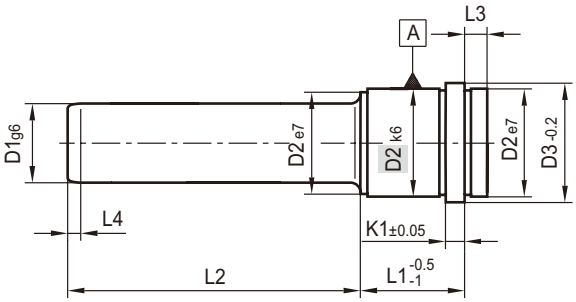

Code	L1	D1	L2	D2	D3	L3	L4	K1
C1012-22- 9-25	22	9	25	14	16	3	4	3
			35					
C1012-27- 9-30	27		30					
			50					
C1012-36- 9-25	36		25					
			45					
C1012-46- 9-45	46		45					
C1012-56- 9-60	56		60					
C1012-66- 9-45	66		45					
C1012-22-10-25	22	10	25					
			35					
C1012-27-10-30	27		30					
			50					
C1012-36-10-25	36		25					
			45					
C1012-46-10-45	46		45					
C1012-56-10-60	56		60					
C1012-66-10-45	66		45					
C1012-22-14-30	22	14	30	20	25	9	7	6
			50					
			70					
			90					
C1012-27-14-30	27		30					
			45					
			65					
			85					
C1012-36-14-35	36		35					
			55					
			75					
			95					

Code	L1	D1	L2	D2	D3	L3	L4	K1
C1012-46-14-35	46	14	35	20	25	9	7	6
			45					
			65					
			85					
C1012-56-14-35	56		35					
			55					
			75					
			95					
C1012-66-14-55	66		55					
			65					
			95					
C1012-76-14-55	76		55					
			95					
C1012-86-14-55	86		55					
			95					
C1012-22-15-30	22	15	30					
			50					
			70					
			90					
C1012-27-15-30	27		30					
			45					
			65					
			85					
C1012-36-15-35	36		35					
			55					
			75					
			95					
C1012-46-15-35	46		35					
			45					
			65					

C1012

导柱

Guide pins

Mat：≈1.0401 / 690+70 HV30

Compability:HASCO Z04

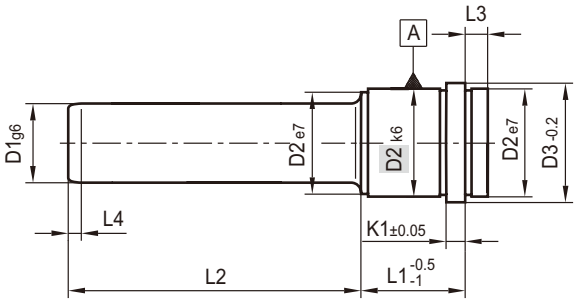

Code	L1	D1	L2	D2	D3	L3	L4	K1
C1012-46-15-85	46	15	85	20	25	9	7	6
C1012-56-15-35	56		35					
			55					
			75					
			95					
C1012-66-15-55	66		55					
			65					
			95					
C1012-76-15-55	76		55					
			95					
C1012-86-15-55	86		55					
			95					
C1012-27-18-35	27	18	35	26	31			
			45					
			65					
			85					
			105					
C1012-36-18-35	36		35					
			55					
			75					
			95					
			115					
			135					
C1012-46-18-35	46		35					
			45					
			65					
			85					
			135					
C1012-56-18-35	56		35					
			55					

Code	L1	D1	L2	D2	D3	L3	L4	K1
C1012- 56-18- 75	56	18	75	26	31	9	7	6
C1012- 66-18- 55	66		55					
			75					
			95					
			145					
C1012- 76-18- 55	76		55					
			95					
			135					
C1012- 86-18- 55	86		55					
			95					
			125					
C1012- 96-18- 95	96		95					
C1012-116-18-115	116		115					
C1012- 27-20- 35	27	20	35					
			45					
			65					
			85					
			105					
C1012- 36-20- 35	36		35					
			55					
			75					
			95					
			115					
			135					
C1012- 46-20- 35	46		35					
			45					
			65					
			85					
			135					
C1012- 56-20- 35	56		35					

C1012

导柱

Guide pins

Mat：≈1.0401 / 690+70 HV30

Compability:HASCO Z04

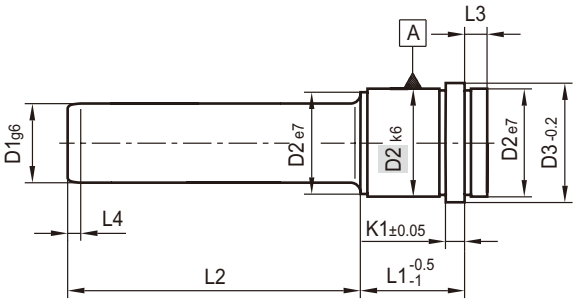

Code	L1	D1	L2	D2	D3	L3	L4	K1
C1012- 56-20- 55	56	20	55	26	31	9	7	6
			75					
C1012- 66-20- 55	66		55					
			75					
			95					
			145					
C1012- 76-20- 55	76		55					
			95					
			135					
C1012- 86-20- 55	86		55					
			95					
			125					
C1012- 96-20- 95	96		95					
C1012-116-20-115	116		115					
C1012- 27-22- 35	27	22	35	30	35			
			45					
			65					
			85					
			105					
			125					
			165					
			205					
C1012- 36-22- 35	36		35					
			55					
			75					
			95					
			115					
			135					
			165					
			205					

Code	L1	D1	L2	D2	D3	L3	L4	K1
C1012-46-22-35	46	22	35	30	35	9	7	6
			45					
			65					
			85					
			105					
			125					
			165					
C1012-56-22-35	56		35					
			55					
			75					
			95					
			115					
			165					
			205					
C1012-66-22-35	66		35					
			55					
			75					
			95					
			155					
C1012-76-22-55	76		55					
			75					
			95					
			115					
			145					
C1012-86-22-55	86		55					
			75					
			95					
			135					
C1012-96-22-55	96		55					
			75					

C1012

导柱

Guide pins

Mat：≈1.0401 / 690+70 HV30

Compability:HASCO Z04

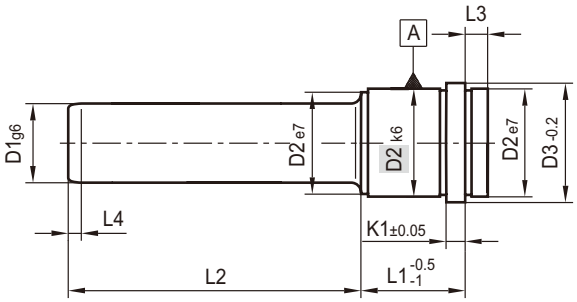

Code	L1	D1	L2	D2	D3	L3	L4	K1
C1012- 96-22- 95	96	22	95	30	35	9	7	6
			125					
C1012-116-22- 75	116		75					
			115					
			155					
C1012-136-22-135	136		135					
C1012-156-22-155	156		155					
C1012- 27-24- 35	27	24	35					
			45					
			65					
			85					
			105					
			125					
			165					
			205					
C1012- 36-24- 35	36		35					
			55					
			75					
			95					
			115					
			135					
			165					
			205					
C1012- 46-24- 35	46		35					
			45					
			65					
			85					
			105					
			125					
			165					

Code	L1	D1	L2	D2	D3	L3	L4	K1
C1012- 56-24- 35	56	24	35	30	35	9	7	6
			55					
			75					
			95					
			115					
			165					
			205					
C1012- 66-24- 35	66		35					
			55					
			75					
			95					
			155					
C1012- 76-24- 55	76		55					
			75					
			95					
			115					
			145					
C1012- 86-24- 55	86		55					
			75					
			95					
			135					
C1012- 96-24- 55	96		55					
			75					
			95					
			125					
C1012-116-24- 75	116		75					
			115					
			155					
C1012-136-24-135	136		135					
C1012-156-24-155	156		155					

C1012

导柱

Guide pins

Mat：≈1.0401 / 690+70 HV30

Compability:HASCO Z04

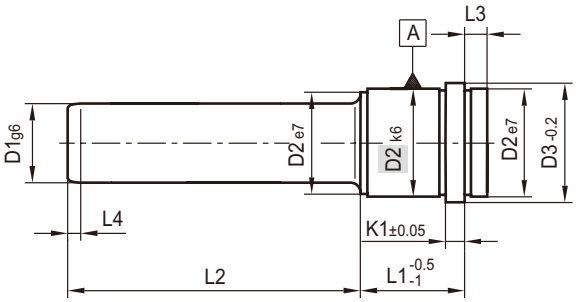

Code	L1	D1	L2	D2	D3	L3	L4	K1
C1012-36-30-55	36	30	55	42	47	9	7	6
			75					
			155					
			245					
C1012-46-30-65	46		65					
			85					
			105					
			125					
			165					
			245					
C1012-56-30-55	56		55					
			75					
			95					
			135					
			175					
			245					
C1012-66-30-55	66		55					
			75					
			95					
			115					
			175					
			295					
C1012-76-30-55	76		55					
			75					
			95					
			115					
			155					
			225					
C1012-86-30-75	86		75					
			95					

Code	L1	D1	L2	D2	D3	L3	L4	K1
C1012- 86-30-115	86	30	115	42	47	9	7	6
			155					
			225					
C1012- 96-30- 75	96		75					
			95					
			115					
			155					
			205					
C1012-116-30- 75	116		75					
			115					
			155					
C1012-136-30- 95	136		95					
			115					
			155					
C1012-156-30-115	156		115					
			155					
C1012-196-30-155	196		155					
C1012- 36-32- 55	36	32	55					
			75					
			155					
			245					
C1012- 46-32- 65	46		65					
			85					
			105					
			125					
			165					
			245					
C1012- 56-32- 55	56		55					
			75					
			95					

C1012

导柱

Guide pins

Mat：≈1.0401 / 690+70 HV30

Compability:HASCO Z04

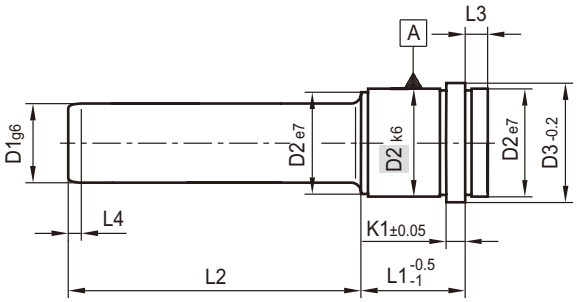

Code	L1	D1	L2	D2	D3	L3	L4	K1
C1012-56-32-135	56	32	135	42	47	9	7	6
			175					
			245					
C1012- 66-32-55	66		55					
			75					
			95					
			115					
			175					
			295					
C1012- 76-32-55	76		55					
			75					
			95					
			115					
			155					
			225					
C1012- 86-32-75	86		75					
			95					
			115					
			155					
			225					
C1012- 96-32-75	96		75					
			95					
			115					
			155					
			205					
C1012-116-32-75	116		75					
			115					
			155					
C1012-136-32-95	136		95					
			115					

Code	L1	D1	L2	D2	D3	L3	L4	K1
C1012-136-32-155	136	32	155	42	47	9	7	6
C1012-156-32-115	156		115					
			155					
C1012-196-32-155	196		155					
C1012- 76-40-115	76	40	115	54	60	12	10	10
C1012- 96-40-155	96		155					
C1012-116-40-135	116		135					
			195					
C1012-136-40- 95	136		95					
			135					
C1012-196-40-155	196		155					
			195					
C1012- 76-42-115	76	42	115					
C1012- 96-42-155	96		155					
C1012-116-42-135	116		135					
			195					
C1012-136-42- 95	136		95					
			135					
C1012-196-42-155	196		155					
			195					

C1500

导套

Guide bush

Mat : ≈1.0401 / 690+70 HV30

Compability:HASCO Z10

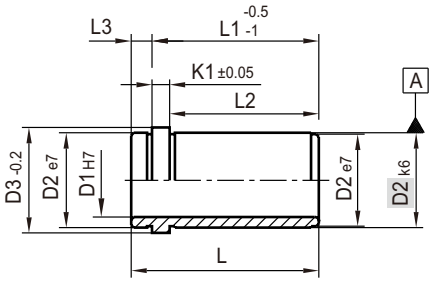

Typ 1

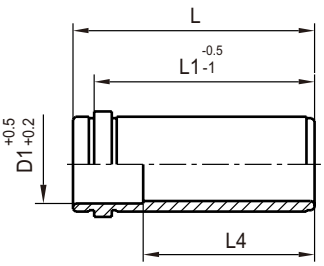

Typ 2

Code	D1	L2	D2	D3	L1	L3	L4	K1	Typ
C1500-9 - 9		**9**			12		12		
		12			15		15		
		17			20		20		1
		22			25		25		
	9	**27**			30		30		
		36			39		39		
		46			49		46		
		56			59				2
		66	14	16	69	3		3	
C1500-10- 9		**9**			12		12		
		12			15		15		
		17			20		20		1
		22			25		25		
	10	**27**			30		30		
		36			39		39		
		46			49		46		
		56			59				2
		66			69				
C1500-14-12		**12**			21		21		
		17			26		26		
		22			31		31		1
		27			36		36		
		36			45		45		
	14	**46**	20	25	55	9	55	6	
		56			65		56		
		66			75				2
		76			85				
		86			95				
		96			105				

Code	D1	L2	D2	D3	L1	L3	L4	K1	Typ
C1500-14-116	**14**	**116**			125		56		2
C1500-15- 12		**12**			21		21		
		17			26		26		
		22			31		31		1
	15	**27**			36		36		
		36			45		45		
		46	20	25	55		55		
		56			65				
		66			75				
		76			85		56		2
		86			95				
		96			105				
		116			125				
C1500-18- 17		**17**			26		26		
		22			31	9	31	6	
		27			36		36		
		36			45		45		1
		46			55		55		
	18	**56**			65		65		
		66			75		75		
		76			85				
		86	26	31	95				
		96			105		76		2
		116			125				
		136			145				
C1500-20- 17		**17**			26		26		
	20	**22**			31		31		1
		27			36		36		
		36			45		45		

C1500

导套

Guide bush

Mat : ≈1.0401 / 690+70 HV30

Compability: HASCO Z10

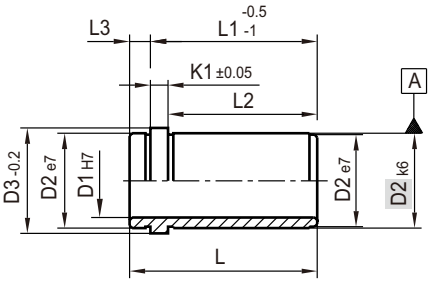

Typ 1

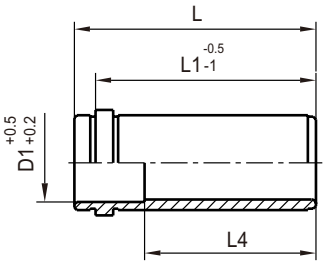

Typ 2

Code	D1	L2	D2	D3	L1	L3	L4	K1	Typ
C1500-20 -46	20	46	26	31	55	9	55	6	1
		56			65		65		
		66			75		75		
		76			85		76		2
		86			95				
		96			105				
		116			125				
		136			145				
C1500-22 -17	22	17	30	35	26		26		1
		22			31		31		
		27			36		36		
		36			45		45		
		46			55		55		
		56			65		65		
		66			75		75		
		76			85		85		
		86			95		95		
		96			105		105		
		116			125		96		2
		136			145				
		156			165				
C1500-24 -17	24	17			26		26		1
		22			31		31		
		27			36		36		
		36			45		45		
		46			55		55		
		56			65		65		
		66			75		75		
		76			85		85		

Code	D1	L2	D2	D3	L1	L3	L4	K1	Typ
C1500-24 -86	24	86	30	35	95	9	95	6	1
		96			105		105		
		116			125		96		2
		136			145				
		156			165				
C1500-30 -22	30	22	42	47	31		31		1
		27			36		36		
		36			45		45		
		46			55		55		
		56			65		65		
		66			75		75		
		76			85		85		
		86			95		95		
		96			105		105		
		116			125		125		
		136			145		116		2
		156			165				
		176			185				
		196			205				
C1500-32 -22	32	22			31		31		1
		27			36		36		
		36			45		45		
		46			55		55		
		56			65		65		
		66			75		75		
		76			85		85		
		86			95		95		
		96			105		105		
		116			125		125		

C1500

导套

Guide bush

Mat：≈1.0401 / 690+70 HV30

Compability:HASCO Z10

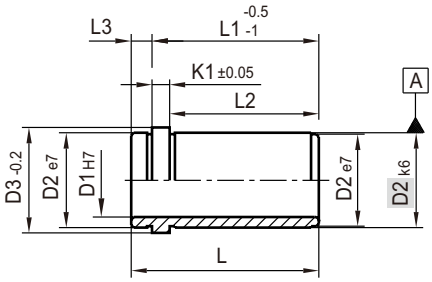

Typ 1

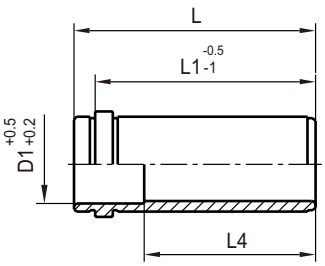

Typ 2

Code	D1	L2	D2	D3	L1	L3	L4	K1	Typ
C1500-32-136	32	136	42	47	145	9	116	6	2
		156			165				
		176			185				
		196			205				
C1500-40- 36	40	36	54	60	48	12	48	10	1
		46			58		58		
		56			68		68		
		66			78		78		
		76			88		88		
		86			98		98		
		96			108		108		
		116			128		128		
		136			148		136		2
		156			168				
		176			188				
		196			208				
		216			228				
		236			248				
		246			258				
C1500-42- 36	42	36			48		48		1
		46			58		58		
		56			68		68		
		66			78		78		
		76			88		88		
		86			98		98		
		96			108		108		
		116			128		128		
		136			148		136		2
		156			168				

Code	D1	L2	D2	D3	L1	L3	L4	K1	Typ
C1500-42-176	42	176	54	60	188	12	136	10	2
		196			208				
		216			228				
		236			248				
		246			258				
C1500-50- 56	50	56	66	72	68		68		1
		66			78		78		
		76			88		88		
		86			98		98		
		96			108		108		
		116			128		128		
		136			148		136		2
		156			168				
		176			188				
		196			208				
		216			228				
		236			248				
C1500-52- 56	52	56			68		68		1
		66			78		78		
		76			88		88		
		86			98		98		
		96			108		108		
		116			128		128		
		136			148		136		2
		156			168				
		176			188				
		196			208				
		216			228				
		236			248				

C1501

导套

Guide bush

Mat：≈2.0975

Compability:HASCO Z1000W

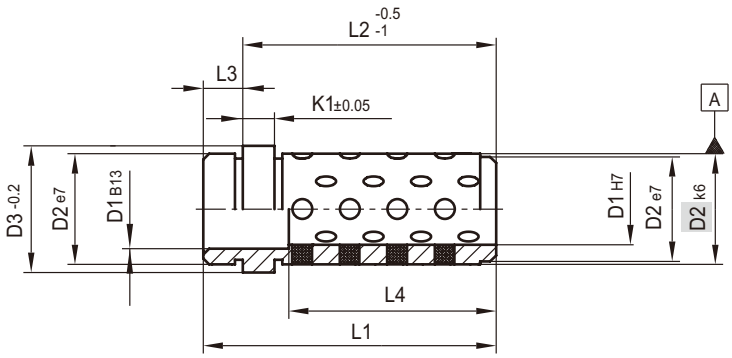

Code	D1	L2	D2	D3	L4	L3	L1	K1
C1501- 9-12	9	12	14	16	17	5	17	3
		17			22		22	
		22			27		20	
		27			32			
		36			41			
		46			51			
		56			61			
		66			71			
C1501-10-12	10	12			17		17	
		17			22		22	
		22			27		20	
		27			32			
		36			41			
		46			51			
		56			61			
		66			71			
C1501-14-17	14	17	20	25	23	6	23	6
		22			28		28	
		27			33		33	
		36			42		28	
		46			52		30	
		56			62			
		66			72			
		76			82			
		86			92			
C1501-15-17	15	17			23		23	
		22			28		28	
		27			33		33	
		36			42		28	
		46			52		30	
		56			62			
		66			72			
		76			82			
		86			92			
C1501-18-17	18	17	26	31	25	8	25	
		22			30		30	

Code	D1	L2	D2	D3	L1	L3	L4	K1
C1501-18-27	18	27	26	31	35	8	35	6
		36			44		30	
		46			54		40	
		56			64			
		66			74			
		76			84			
		86			94			
		96			104			
		116			124			
C1501-20-17	20	17			25		25	
		22			30		30	
		27			35		35	
		36			44		30	
		46			54		40	
		56			64			
		66			74			
		76			84			
		86			94			
		96			104			
		116			124			
C1501-22-22	22	22	30	35	30		30	
		27			35		35	
		36			44		36	
		46			54			
		56			64		49	
		66			74			
		76			84			
		86			94			
		96			104			
		116			124			
		136			144			
		156			164		49	
C1501-24-22	24	22			30		30	
		27			35		35	
		36			44		36	
		46			54		36	

C1501

导套

Guide bush

Mat：≈2.0975

Compability:HASCO Z1000W

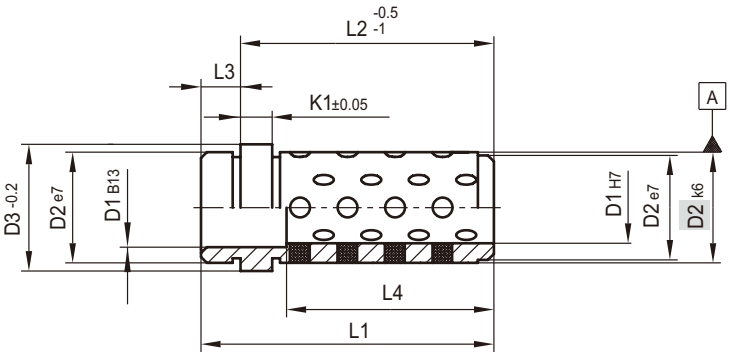

Code	D1	L2	D2	D3	L1	L3	L4	K1
C1501-24-56	24	56	30	35	64	8	49	6
		66			74			
		76			84			
		86			94			
		96			104			
		116			124			
		136			144			
		156			164			
C1501-30-27	30	27	42	47	35		35	
		36			44		44	
		46			54		54	
		56			64		64	
		66			74			
		76			84			
		86			94			
		96			104			
		116			124			
		136			144			
		156			164			
C1501-32-27	32	27			35		35	
		36			44		44	
		46			54		54	
		56			64		64	
		66			74		54	
		76			84		64	
		86			94			
		96			104			
		116			124			
		136			144			
		156			164			
C1501-40-36	40	36	54	60	46	10	46	10
		46			56		56	
		56			66		66	
		66			76		76	
		76			86		86	
		86			96		76	

Code	D1	L2	D2	D3	L1	L3	L4	K1
C1501-40-96	40	96	54	60	106	10	80	10
		116			126			
		136			146			
		156			166			
		196			206			
C1501-42-36	42	36			46		46	
		46			56		56	
		56			66		66	
		66			76		76	
		76			86		86	
		86			96		76	
		96			106		80	
		116			126			
		136			146			
		156			166			
		196			206			
C1501-50-56	50	56	66	72	66		66	
		66			76		76	
		76			86		86	
		86			96		76	
		96			106		80	
		116			126			
		136			146			
		156			166			
		196			206			
C1501-52-56	52	56			66		66	
		66			76		76	
		76			86		86	
		86			96		96	
		96			106		80	
		116			126			
		136			146			
		156			166			
		196			206			

C1510

导套

Guide bush

Mat：≈1.0401/690+70HV30

Compability:HASCO Z11

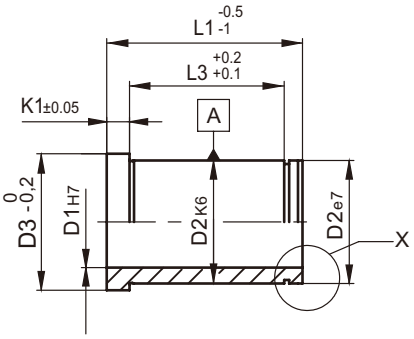

Typ 1

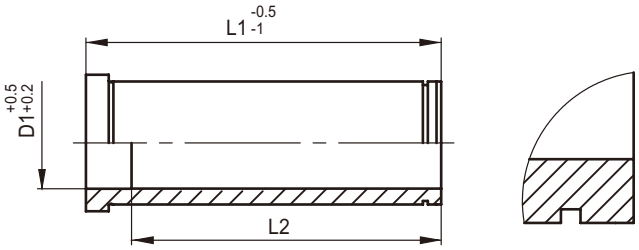

Typ 2

Code	D1	L1	D2	D3	L2	L3	K1	Typ
C1510- 9- 9		9			9	-		
		12			12	5.5		
		17			17	10.5		
		22			22	15.5		1
	9	27			27	20.5		
		36			36	29.5		
		46				39.5		
		56			46	49.5		2
		66	14	16		59.5	3	
C1510-10- 9		9			9	-		
		12			12	5.5		
		17			17	10.5		1
		22			22	15.5		
	10	27			27	20.5		
		36			36	29.5		
		46				39.5		
		56			46	49.5		2
		66				59.5		
C1510-12-12		12			12	-		
		17			17	7		
		22			22	12		
	12	27	18	23	27	17		
		36			36	26		
		46			46	36		
		56			56	46		1
C1510-14-12		12			12	-	6	
		17			17	7		
		22			22	12		
		27			27	17		
	14	36	20	25	36	26		
		46			46	36		
		56				46		
		66			56	56		2
		76				66		

C1510

导套

Guide bush

Mat：≈1.0401/690+70HV30

Compability:HASCO Z11

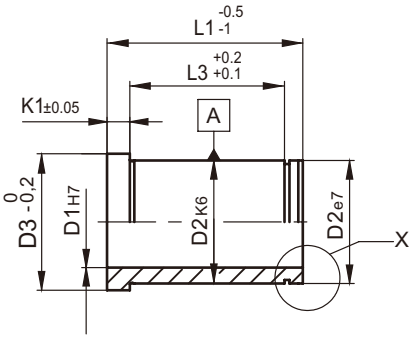

Typ 1

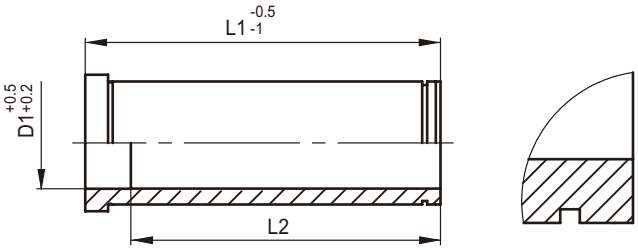

Typ 2

Code	D1	L1	D2	D3	L2	L3	K1	Typ
C1510-14-86		**86**				76		
	14	**96**			56	86		2
		116				106		
C1510-15-12		**12**			12	-		
		17			17	7		
		22			22	12		
		27			27	17		1
		36	20	25	36	26		
		46			46	36		
	15	**56**				46		
		66				56		
		76			56	66		
		86				76		2
		96				86		
		116				106		
C1510-16-17		**17**			17	7		
		22			22	12		
		27			27	17		1
		36			36	26		
		46			46	36		
	16	**56**	22	27		46	6	
		66				56		
		76			56	66		2
		86				76		
		96				86		
C1510-18-17		**17**			17	7		
		22			22	12		
		27			27	17		
		36			36	26		1
	18	**46**	26	31	46	36		
		56			56	46		
		66			66	56		
		76			76	66		
		86				76		2

C1510

导套

Guide bush

Mat：≈1.0401/690+70HV30

Compability:HASCO Z11

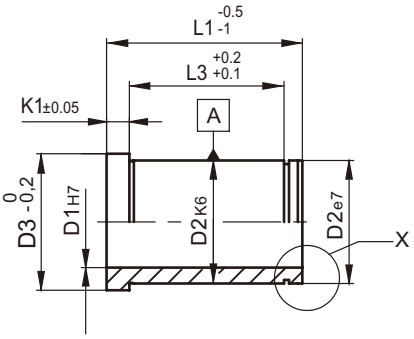

Typ 1

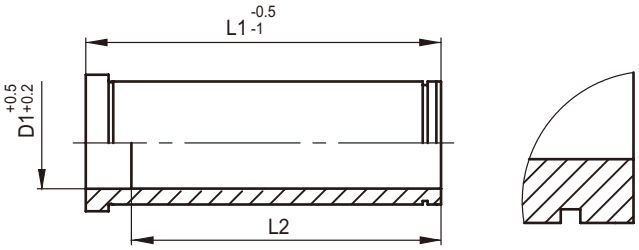

Typ 2

Code	D1	L1	D2	D3	L2	L3	K1	Typ
C1510-18-96	18	96	26	31	76	86	6	2
		116				106		
		136				126		
C1510-20-17	20	17			17	7		1
		22			22	12		
		27			27	17		
		36			36	26		
		46			46	36		
		56			56	46		
		66			66	56		
		76			76	66		
		86				76		2
		96				86		
		116				106		
		136				126		
C1510-22-17	22	17	30	35	17	-		1
		22			22	11		
		27			27	16		
		36			36	25		
		46			46	35		
		56			56	45		
		66			66	55		
		76			76	65		
		86			86	75		
		96			96	85		
		116				105		2
		136				125		
		156				145		
C1510-24-17	24	17			17	-		1
		22			22	11		
		27			27	16		
		36			36	25		
		46			46	35		
		56			56	45		

C1510

导套

Guide bush

Mat：≈1.0401/690+70HV30

Compability:HASCO Z11

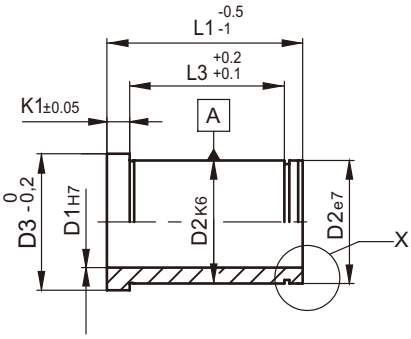

Typ 1

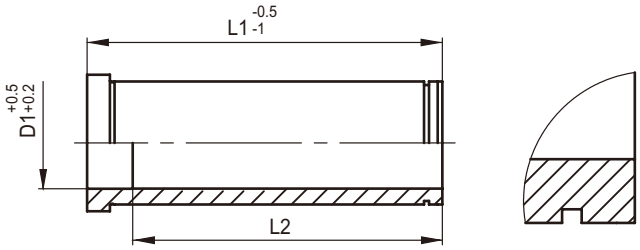

Typ 2

Code	D1	L1	D2	D3	L2	L3	K1	Typ
C1510-24-66		**66**			66	55		
		76			76	65		1
		86			86	75		
	24	**96**	30	35		85		
		116			96	105		
		136				125		2
		156				145		
C1510-30-22		**22**			22	-		
		27			27	14		
		36			36	23		
		46			46	33		
		56			56	43		1
		66			66	53		
		76			76	63		
	30	**86**			86	73		
		96			96	83		
		116				103	6	
		136				123		
		156			116	143		
		176				163		2
		196	42	47		183		
C1510-32-22		**22**			22	-		
		27			27	14		
		36			36	23		
		46			46	33		
		56			56	43		
		66			66	53		
	32	**76**			76	63		1
		86			86	73		
		96			96	83		
		116				103		
		136			116	123		
		156				143		2
		176				163		

C1510

导套

Guide bush

Mat：≈1.0401/690+70HV30

Compability:HASCO Z11

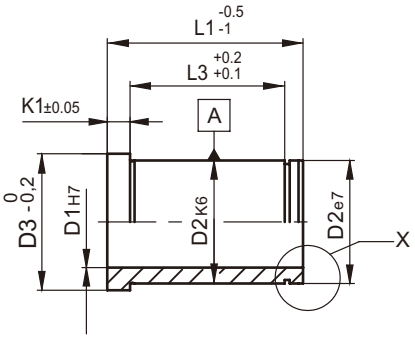

Typ 1

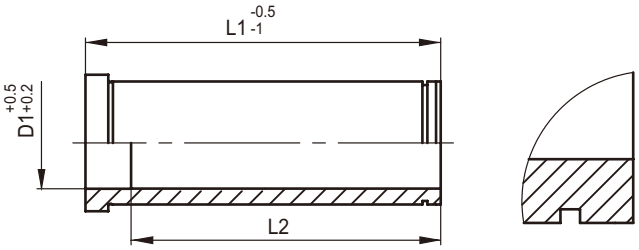

Typ 2

Code	D1	L1	D2	D3	L2	L3	K1	Typ
C1510-32-196	**32**	**196**	42	47	116	183	6	2
C1510-36- 40		**36**			36	18		
		46			46	28		
		56			56	38		
		66			66	48		
		76			76	58		1
		86			86	68		
		96			96	78		
	40	**116**			116	98		
		136				118		
		156				138		
		176				158		
		196			136	178		2
		216				198		
		236				218		
		246	54	60		228		
C1510-42- 36		**36**			36	18		
		46			46	28	10	
		56			56	38		
		66			66	48		
		76			76	58		1
		86			86	68		
		96			96	78		
	42	**116**			116	98		
		136				118		
		156				138		
		176				158		
		196			136	178		2
		216				198		
		236				218		
		246				228		
C1510-50- 56		**56**			56	38		
	50	**66**	66	72	66	48		1
		76			76	58		

C1510

导套

Guide bush

Mat：≈1.0401/690+70HV30

Compability:HASCO Z11

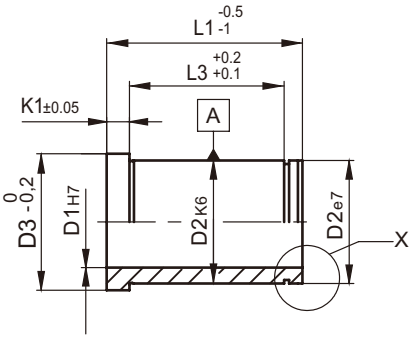

Typ 1

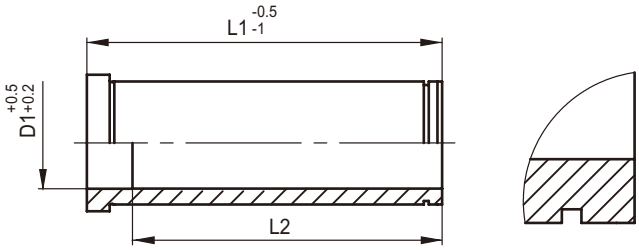

Typ 2

Code	D1	L1	D2	D3	L2	L3	K1	Tpy
C1510-50-86		**86**			86	68		
		96			96	78		1
		116			116	98		
		136				118		
		156				138		
	50	**176**				158		
		196			136	178		2
		216				198		
		236				218		
		246				228		
C1510-52-56		**56**			56	38		
		66	66	72	66	48	10	
		76			76	58		
		86			86	68		1
		96			96	78		
		116			116	98		
	52	**136**				118		
		156				138		
		176				158		
		196			136	178		2
		216				198		
		236				218		
		246				228		
C1510-60-96		**96**			96	68		
		116			116	88		1
		136				108		
		156				128		
		196				168		
	60	**246**	80	86		218	20	
					136			2

C1511

导套

Guide bush

Mat：≈2.0975

Compability:HASCO Z1100W

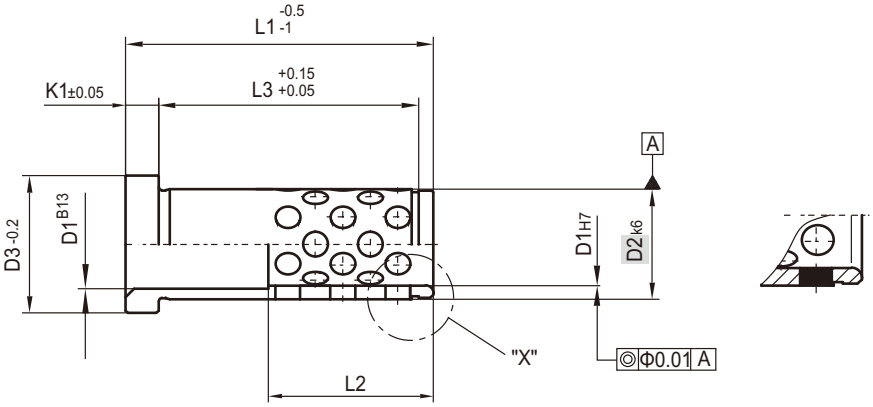

Code	D1	L1	D2	D3	L2	L3	K1
C1511-9 -12		12			12	6.6	
		17			17	11.6	
		22			22	16.6	
	9	27				21.6	
		36			20	30.6	
		46				40.6	
		56	14	16		50.6	3
C1511-10-12		12			12	6.6	
		17			17	11.6	
		22			22	16.6	
	10	27				21.6	
		36			20	30.6	
		46				40.6	
		56				50.6	
C1511-12-17		17			17	8.3	
		22			22	13.3	
		27	18	23	27	18.3	
	12	36				27.3	
		46			24	37.3	
		56				47.3	
C1511-14-17		17			17	8.3	
		22			22	13.3	
		27			27	18.3	
	14	36			28	27.3	6
		46			30	37.3	
		56	20	25		47.3	
C1511-15-17		17			17	8.3	
		22			22	13.3	
	15	27			27	18.3	
		36			28	27.3	
		46			30	37.3	
		56				47.3	

C1511

导套

Guide bush

Mat：≈2.0975

Compability:HASCO Z1100W

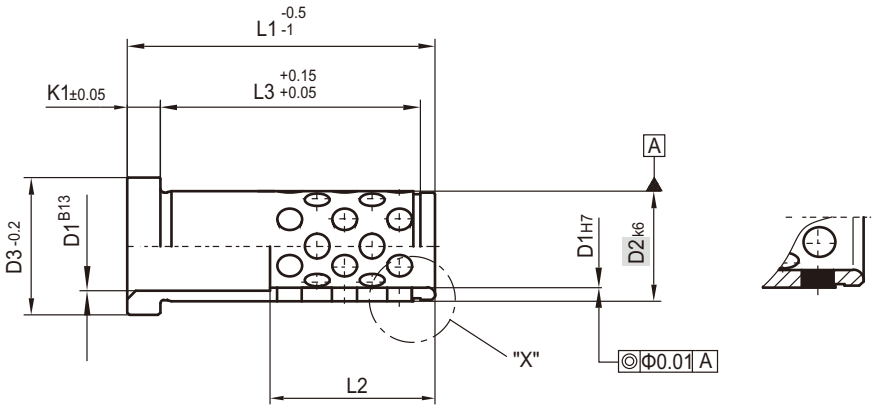

Code	D1	L1	D2	D3	L2	L3	K1
C1511-16-17	16	17	22	27	17	8.3	6
		22			22	13.3	
		27			27	18.3	
		36				27.3	
		46			32	37.3	
		56				47.3	
C1511-18-17	18	17	26	31	17	8.3	
		22			22	13.3	
		27			27	18.3	
		36			36	27.3	
		46			40	37.3	
		56				47.3	
		66				57.3	
		76				67.3	
C1511-20-17	20	17			17	8.3	
		22			22	13.3	
		27			27	18.3	
		36			36	27.3	
		46			40	37.3	
		56				47.3	
		66				57.3	
		76				67.3	
C1511-22-22	22	22	30	35	22	12.6	
		27			27	17.6	
		36			36	26.6	
		46				36.6	
		56			48	46.6	
		66				56.6	
		76				66.6	
		86				76.6	
		96				86.6	

C1511

导套
Guide bush
Mat：≈2.0975
Compability:HASCO Z1100W

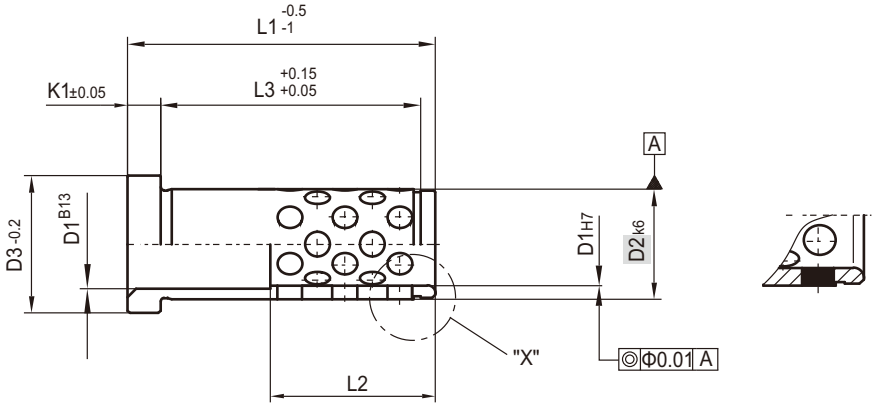

Code	D1	L1	D2	D3	L2	L3	K1
C1511-24-22		22			22	12.6	
		27			27	17.6	
		36			36	26.6	
		46				36.6	
	24	56	30	35		46.6	
		66				56.6	
		76			48	66.6	
		86				76.6	
		96				86.6	
C1511-30-27		27			27	15.85	
		36			36	24.85	
		46			46	34.85	
		56			56	44.85	
	30	66			54	54.85	6
		76				64.85	
		86			64	74.85	
		96				84.85	
		116	42	47		104.85	
C1511-32-27		27			27	15.85	
		36			36	24.85	
		46			46	34.85	
		56			56	44.85	
	32	66			54	54.85	
		76				64.85	
		86			64	74.85	
		96				84.85	
		116				104.85	
C1511-40-36		36			36	20.15	
	40	46	54	60	46	30.15	10
		56			56	40.15	
		66			66	50.15	

C1511

导套

Guide bush

Mat：≈2.0975

Compability:HASCO Z1100W

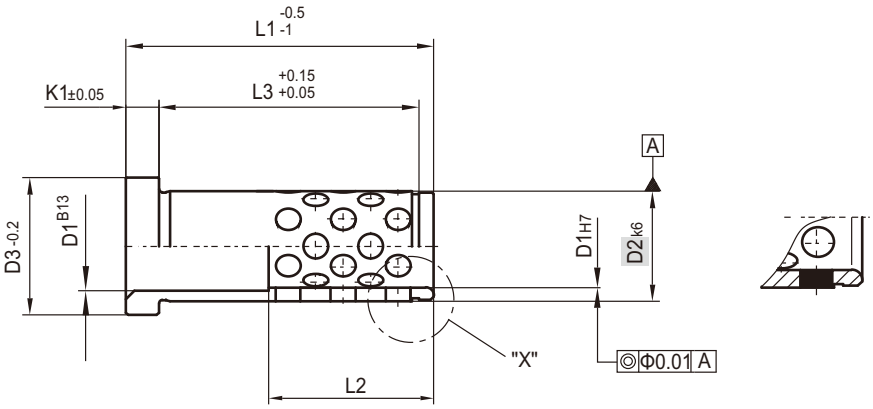

Code	D1	L1	D2	D3	L2	L3	K1
C1511-40-76		76			76	60.15	
		86				70.15	
	40	96			80	80.15	
		116				100.15	
		136				120.15	
C1511-42-36		36			36	20.15	
		46	54	60	46	30.15	
		56			56	40.15	
		66			66	50.15	
	42	76			76	60.15	
		86				70.15	
		96			80	80.15	
		116				100.15	
		136				120.15	
C1511-50-56		56			56	40.15	
		66			66	50.15	
		76			76	60.15	10
	50	86				70.15	
		96			80	80.15	
		116				100.15	
		136				120.15	
C1511-52-56		56			56	40.15	
		66	66	72	66	50.15	
		76			76	60.15	
		86				70.15	
	52	96			80	80.15	
		116				100.15	
		136				120.15	

C1513

导套

Guide bush

Mat：≈2.0975

Compability:HASCO Z13W

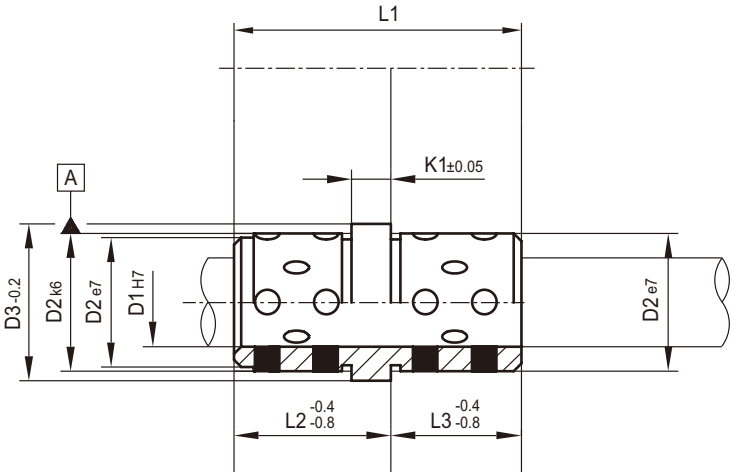

Code	D1	L2	D2	D3	L1	L3	K1
C1513-12-10	10	12	14	16	21	9	6
C1513-17-10		17			26		
	12		18	23	29	12	
	14		20	25	26	9	
C1513-22-14		22			39	17	
C1513-17-15	15	17			26	9	
	18		26	31	29	12	
C1513-22-18		22			39	17	
C1513-27-18		27			44		
C1513-22-20	20	22			39		
C1513-27-20		27			49	22	
C1513-22-22	22	22	30	35	39	17	
C1513-27-22		27			49	22	
C1513-22-24	24	22			39	17	
C1513-27-24		27			49	22	
C1513-36-24		36			63	27	
C1513-27-30	30	27	42	47	49	22	
C1513-36-30		36			63	27	
C1513-46-30		46			73		
C1513-36-32	32	36			63		
C1513-46-40	40	46	54	60	82	36	

C1514

导套
Guide bush
Mat：≈2.0975
Compability:HASCO Z14W

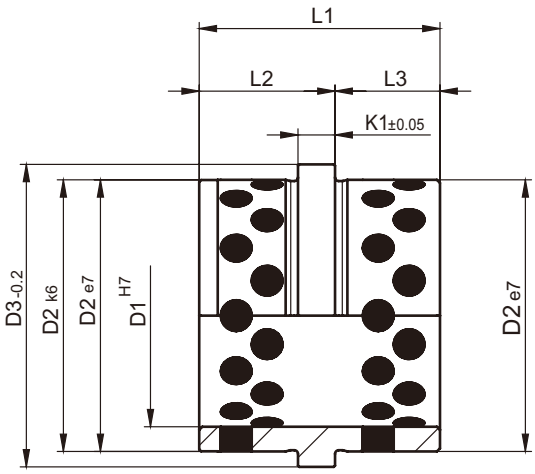

Code	D1	L2	L3	D2	D3	L1	K1
C1514-24-17- 9	24	17	9	30	35	26	6
			12			29	
C1514-36-17- 9	36		9	44	49	26	
		22	17			39	
C1514-48-22-17	48			58	63		
		27	22			49	

C1700

钢珠导套

Steel ball guide bush

Mat：≈1.0401/690+70HV30

Compability:MEUSBURGER E1330

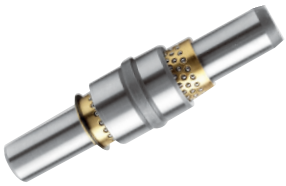

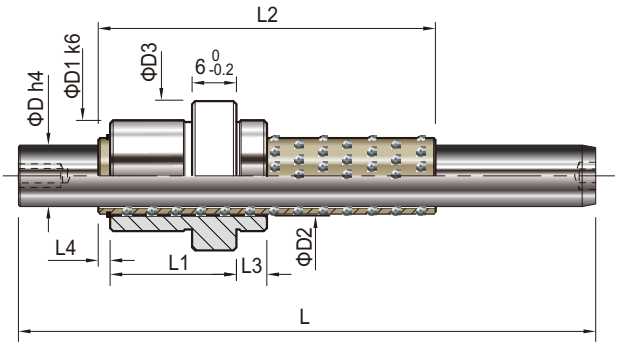

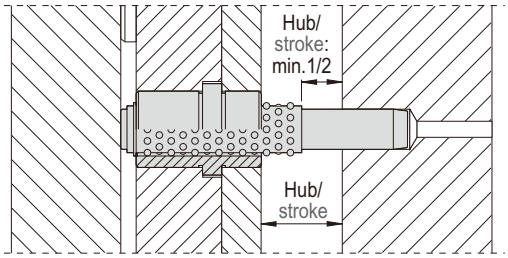

Code	D	L	S (Hub/stroke)	D1	D2	D3	L1	L2	L3	L4
C1700-12- 80- 35	12	80	35	22	17	25	17	36	9	2.5
C1700-12-100- 35		100								
C1700-12-100- 55			55					48		
C1700-12-120- 35		120	35					36		
C1700-12-120- 55			55					48		
C1700-12-140- 55		140								
C1700-12-140- 80			80					60		
C1700-12-160- 80		160								
C1700-18- 80- 45	18	80	45	30	24	33	22	48	12	2.8
C1700-18-100- 45		100								
C1700-18-120- 45		120								
C1700-18-120- 65			65					60		
C1700-18-140- 45		140	45					48		
C1700-18-140- 65			65					60		
C1700-18-160- 65		160								
C1700-18-160- 90			90					76		
C1700-18-180- 90		180								
C1700-24-100- 45	24	100	45	38	30	41	27	52	17	
C1700-24-120- 45		120								
C1700-24-140- 45		140								
C1700-24-140- 75			75					70		
C1700-24-160- 45		160	45					52		
C1700-24-160- 75			75					70		
C1700-24-180- 75		180								
C1700-24-180-105			105					84		
C1700-24-200-105		200								
C1700-30-140- 55	30	140	55	46	38	49	32	70	22	3.8
C1700-30-160- 55		160								
C1700-30-180- 55		180								
C1700-30-180- 55			95					90		
C1700-30-200- 95		200								
C1700-30-250-135		250	135					110		

C1800

钢珠导套

Steel ball guide bush

Mat : ≈1.3505

Compability:HASCO Z12

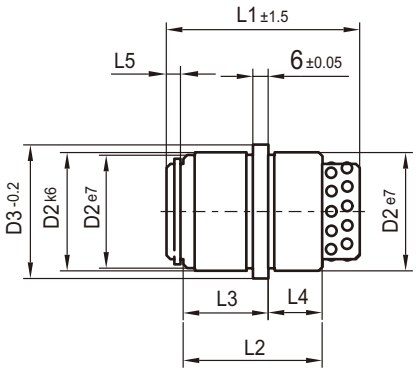

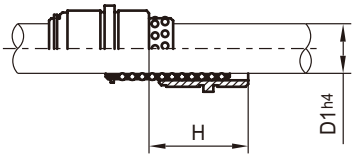

H = Hub
Stroke
Course

C = dynamische Tragzahl gesamt
dynamic load factor total
Indice de charge dynamique
complet

Code	D1	L1	D2	D3	L2	L3	L4	L5	max.H	C[N]
C1800-12-40	12	40	22	26	24	18	6	2.1	50	1680
		56							82	2280
C1800-18-45	18	45	30	35	34	23	11	3	44	3450
		56							66	4200
		71							96	5100
C1800-30-56	30	56	46	52	54	33	21	4.8	32	7600
		75							70	9800
		95							110	11900

C1850

钢珠导套

Steel ball guide bush

Mat：≈1.7131/60-62HRC

Compability:HASCO Z13

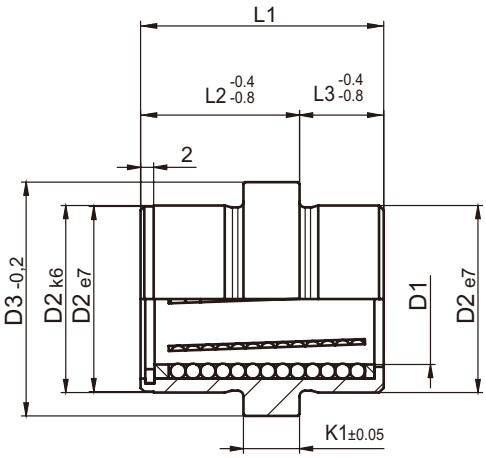

Code	D1	L2	L3	D2	D3	L1	K1
C1850-10-12- 9	10	12	9	20	24	21	6
C1850-10-17- 9		17				26	
C1850-12-17- 9	12			24	28		
C1850-12-17-12			12			29	
C1850-18-22-12	18	22		32	36	34	
C1850-18-22-17			17			39	
C1850-24-17-12	24	17	12	39	43	29	
C1850-24-27-17		27	17			44	
C1850-24-27-22			22			49	
C1850-30-22-17	30	22	17	50	54	39	
C1850-10-32-22		32	22			54	
C1850-10-36-27		36	27			63	
C1850-36-22-17	36	22	17	56	60	39	
C1850-48-22-17	48			70	74		

TMC®
TOOMOCO

2

Locating Parts Series

C2050 2.08
定位块
Square interlocks,DLC
HASCO Z09.../1

C2051 2.09
定位块
Square interlocks,DLC
HASCO Z09.../3

C2100 2.10
定位块
Square interlocks
HASCO Z060

C2102 2.11
定位块
Square interlocks
HASCO Z080

C2103 2.12
定位块
Square interlocks,DLC
HASCO Z082

C2105 2.13
定位块
Square interlocks
HASCO Z085.../1

C2106 2.14
定位块
Square interlocks,DLC
HASCO Z085.../2

C2200 2.15
定位块
Square interlocks
HASCO Z07

C2201 2.15
定位块
Square interlocks
HASCO Z17

C2202 2.16
定位块
Square interlocks
HASCO Z071.../1

C2203 2.17
定位块
Square interlocks
HASCO Z072.../1

C2204 2.18
定位块
Square interlocks,DLC
HASCO Z071.../2

C2205 2.19
定位块
Square interlocks,DLC
HASCO Z072.../2

C2300 2.20
定位块
Square interlocks
STRACK Z50

C2301 2.22
定位块
Square interlocks,DLC
STRACK Z51

C2310 2.24
定位块
Square interlocks
HASC0 Z18

C2311 2.25
定位块
Square interlocks
HASC0 Z19

C2320 2.26
定位块
Square interlocks
STRACK Z46

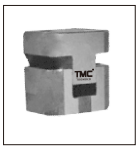

C2400 2.27
定位块
Square interlocks
MEUSBURGER E1304

C2401 2.28
定位块
Square interlocks,DLC
MEUSBURGER E1304

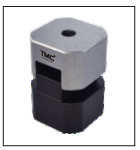

C2403 2.29
定位块
Square interlocks,DLC
MEUSBURGER E1306

C2404 2.30
定位块
Square interlocks,DLC
MEUSBURGER E1306

C2405 2.31
定位块
Square interlocks,DLC
MEUSBURGER E1308

C2406 2.32
定位块
Square interlocks,DLC
MEUSBURGER E1308

C2410 **2.33**

定位块

Square interlocks

MEUSBURGER E1320

C2910 **2.52**

定位柱

Round locating unitsaa

HASCO Z05

C2050

定位块

Square interlocks

Mat：1.2379 / 58-62HRC/DLC

Compability:HASCO Z09…/1

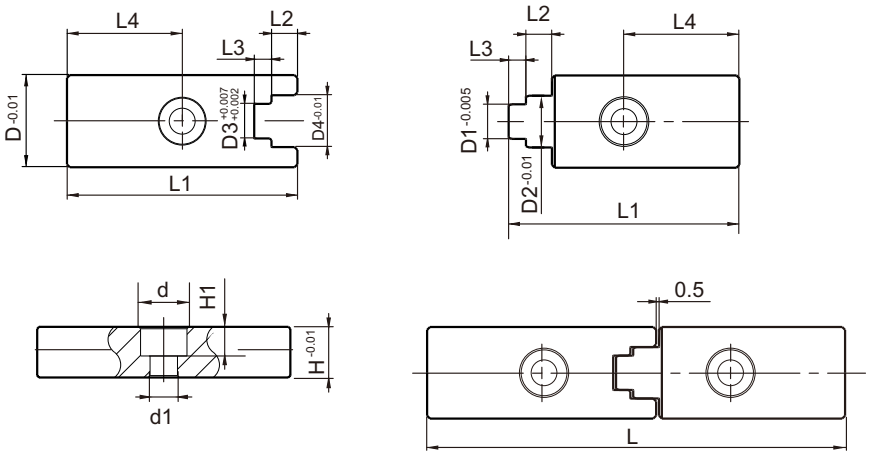

Code	D	H	L	Typ	D1	D2	D3	D4	H1	L1	L2	L3	L4	d	d1
C2050-16-8 -73 -1	**16**	**8**	**73**	**1**	6	8.97	6	9	4.6	40	4.5	3	20	8	4.5
C2050-20-12-109-1	**20**	**12**	**109**		9	11.97	9	12	6.9	60	6.5	5	30	11	6.5

C2050

定位块

Square interlocks

Mat：1.2379 / 58-62HRC/DLC

Compability:HASCO Z09…/2

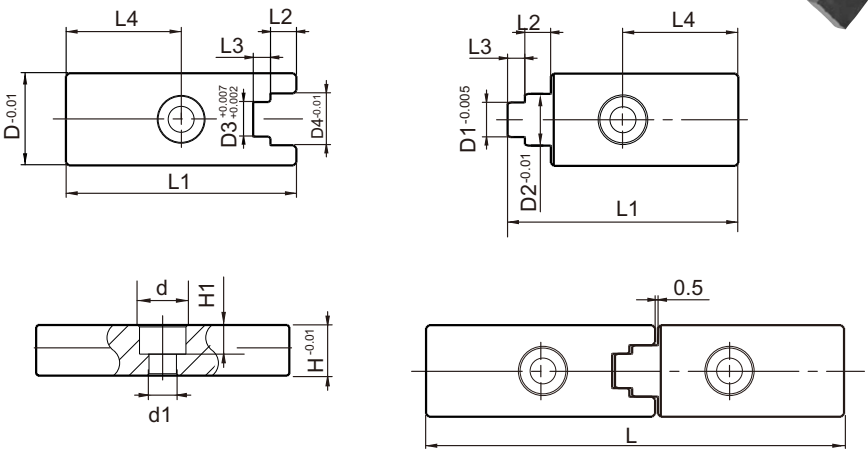

Code	D	H	L	Typ	D1	D2	D3	D4	H1	L1	L2	L3	L4	d	d1
C2050-16-8 -73 -2	**16**	**8**	**73**	**2**	6	8.97	6	9	4.6	40	4.5	3	20	8	4.5
C2050-20-12-109-2	**20**	**12**	**109**		9	11.97	9	12	6.9	60	6.5	5	30	11	6.5

C2051

定位块
Square interlocks
Mat：1.2379 / 58-62HRC/DLC
Compability:HASCO Z09…/3

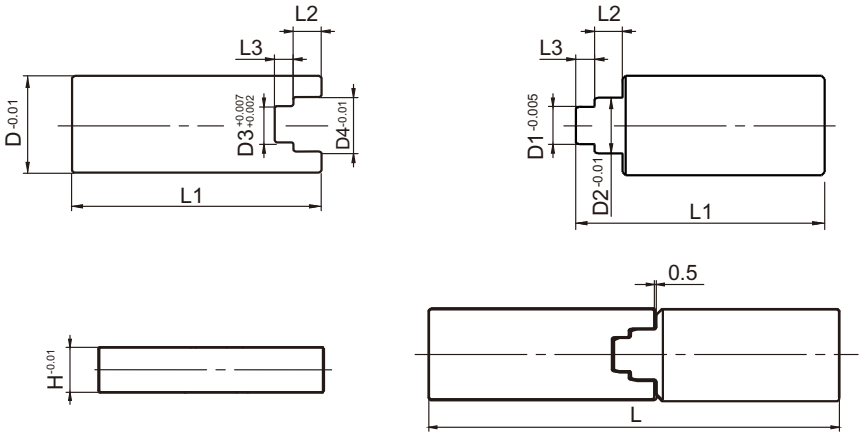

Code	D	H	L	Typ	D1	D2	D3	D4	L1	L2	L3
C2051-16-8 -73 -1	**16**	**8**	**73**	**1**	6	8.97	6	9	40	4.5	3
C2051-20-12-190-1	**20**	**12**	**109**		9	11.97	9	12	60	6.5	5

C2051

定位块
Square interlocks
Mat：1.2379 / 58-62HRC/DLC
Compability:HASCO Z09…/4

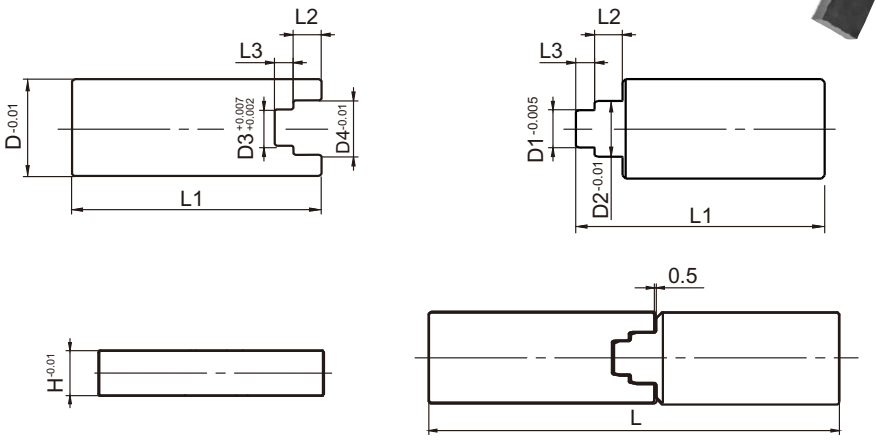

Code	D	H	L	Typ	D1	D2	D3	D4	L1	L2	L3
C2051-16-8 -73 -2	**16**	**8**	**73**	**2**	6	8.97	6	9	40	4.5	3
C2051-20-12-190-2	**20**	**12**	**109**		9	11.97	9	12	60	6.5	5

C2100

定位块
Square interlocks
Mat：1.2343 / 50-54HRC
Compability:HASCO Z060

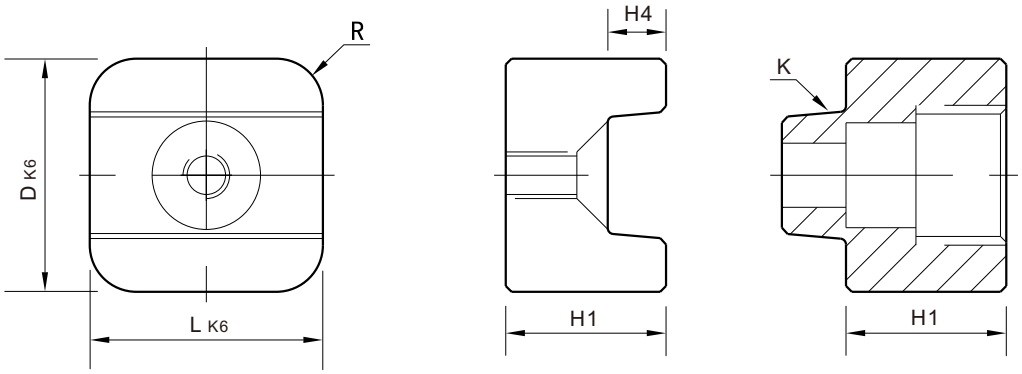

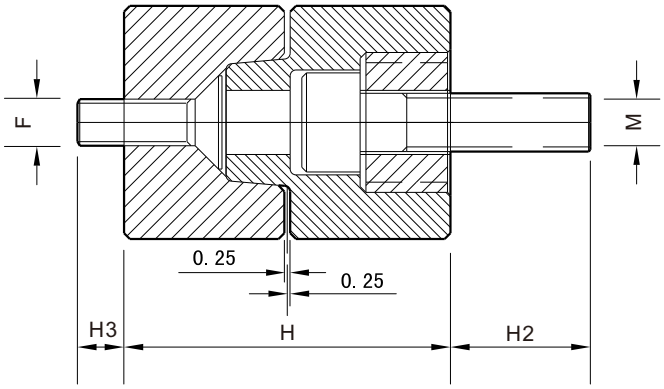

Code	D	L	H	H1	H2	H3	H4	R	F	M	K
C2100-20-20	**20**	**20**	28	13.75	12	4	5	4	M 5	M4	10
C2100-25-25	**25**	**25**	32	15.75	13	8	7	5	M 6	M5	30
C2100-32-32	**32**	**32**	36	17.75	15	12	9	6	M 8	M6	
C2100-40-40	**40**	**40**	45	22.25	17	14	11		M10	M8	

C2102

定位块
Square interlocks
Mat：1.2343 50-54HRC
Compability:HASCO Z080

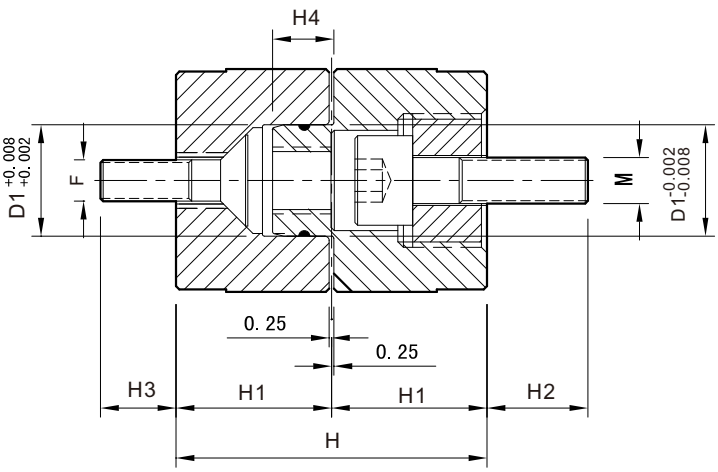

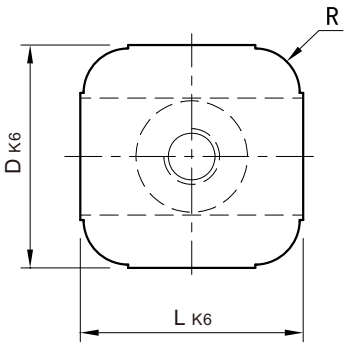

Code	D	L	D1	H	H1	H2	H3	H4	R	M	F
C2102-20-20	**20**	**20**	10	28	14	10	4	5.5	4	M 5	M4
C2102-25-25	**25**	**25**	12	32	16	13	8	7.5	5	M 6	M5
C2102-32-32	**32**	**32**	16	36	18	15	12	9.5	6	M 8	M6
C2102-40-40	**40**	**40**	20	45	22.5	17	14	11.5		M10	M8

C2103

定位块
Square interlocks
Mat：1.2343 / 50-54HRC / DLC
Compability:HASCO Z082

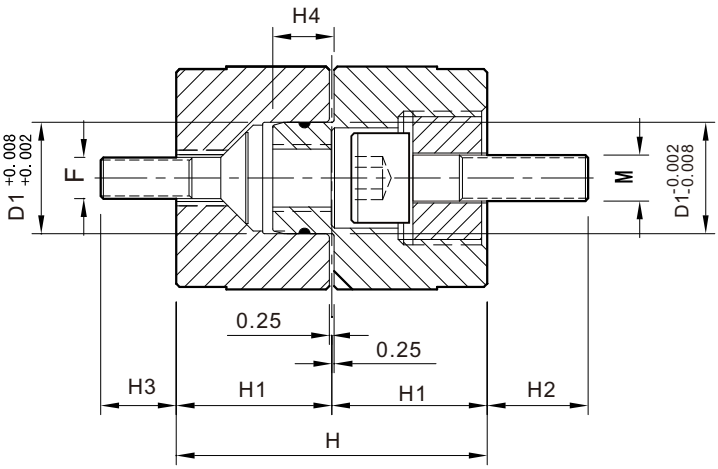

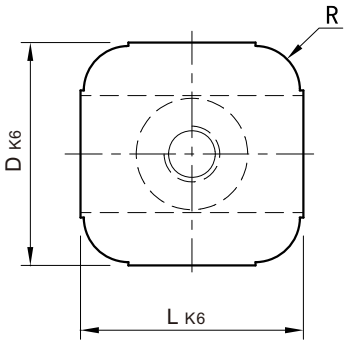

Code	D	L	D1	H	H1	H2	H3	H4	R	M	
										M	F
C2103-20-20	**20**	**20**	10	28	14	10	4	5.5	4	M 5	M4
C2103-25-25	**25**	**25**	12	32	16	13	8	7.5	5	M 6	M5
C2103-32-32	**32**	**32**	16	36	18	15	12	9.5	6	M 8	M6
C2103-40-40	**40**	**40**	20	45	22.5	17	14	11.5		M10	M8

C2105

定位块

Square interlocks

Mat：1.2379 / 58-62HRC

Compability:HASCO Z085…/1

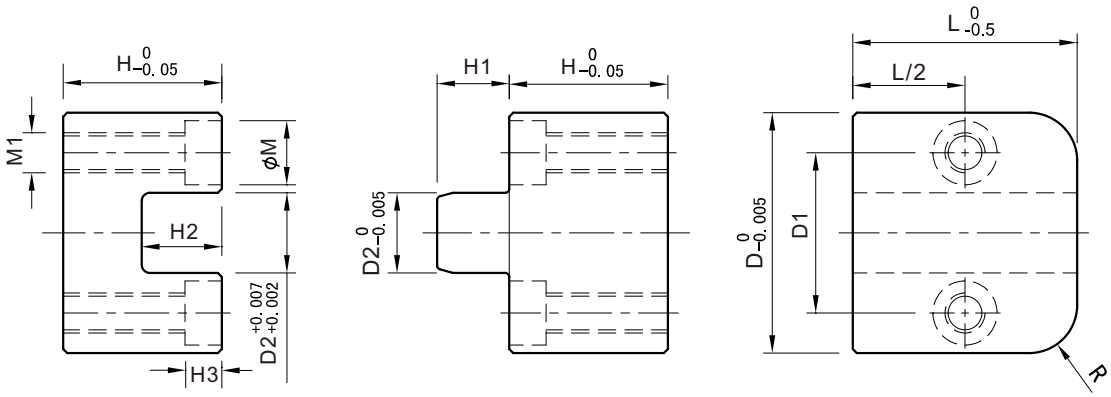

Code	D	L	Typ	D1	D2	H	H1	H2	H3	R	M	M1
C2105-30-28-1	**30**	**28**		20	10	19.8	9	10	4.6	6	8	M 5
C2105-50-33-1	**50**	**33**	**1**	35	20	29.8	16.5	17.5	6.8	8	11	M 8
C2105-75-38-1	**75**	**38**		52	30	39.8	24	25	9	10	15	M10

C2106

定位块
Square interlocks
Mat：1.2379 / 58-62HRC / DLC
Compability:HASCO Z085…/2

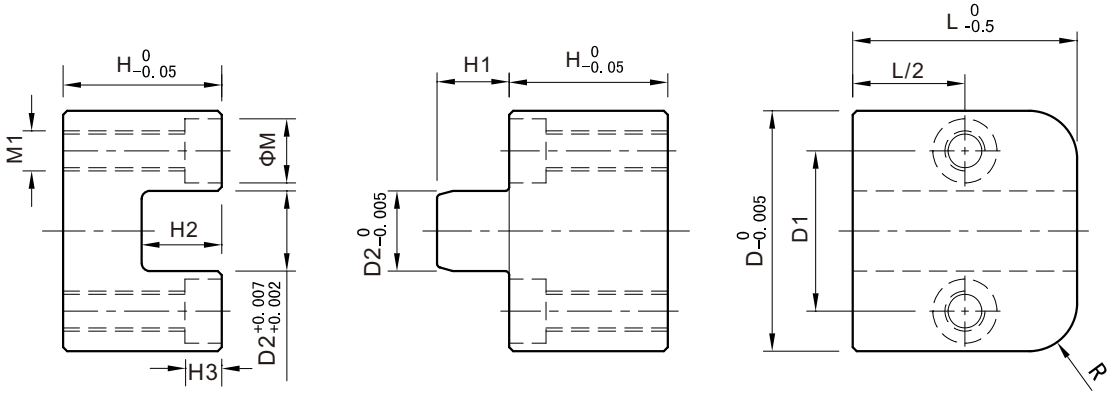

Code	D	L	Typ	D1	D2	H	H1	H2	H3	R	M	M1
C2106-30-28-2	**30**	**28**		20	10	19.8	9	10	4.6	6	8	M 5
C2106-50-33-2	**50**	**33**	**2**	35	20	29.8	16.5	17.5	6.8	8	11	M 8
C2106-75-38-2	**75**	**38**		52	30	39.8	24	25	9	10	15	M10

C2200/01

定位块

Square interlocks

Mat：1.2510 / 58-62HRC

Compability:HASCO Z07/Z17

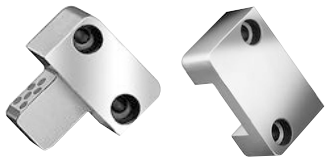

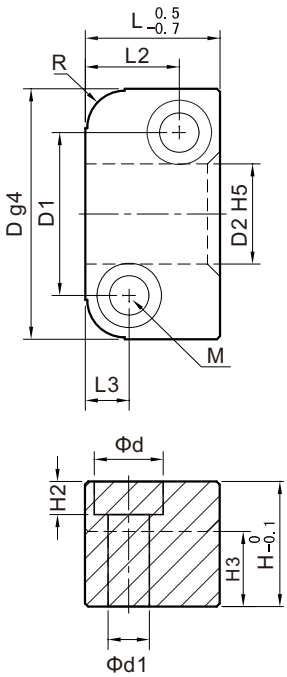

C2201

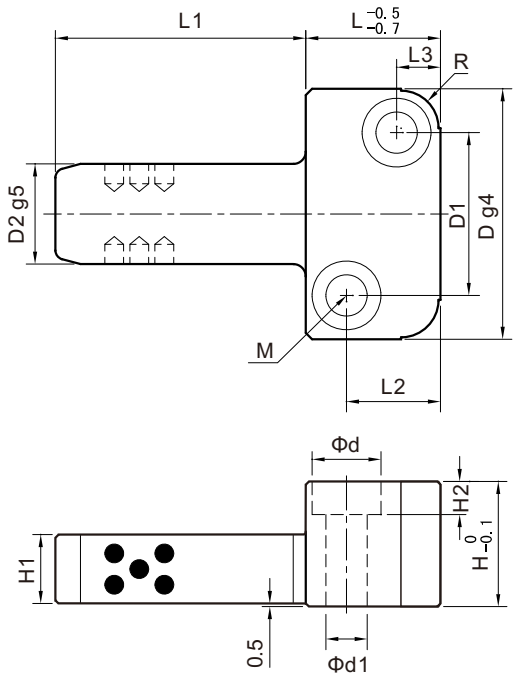

C2200

Code	L	D2	L1	L2	L3	D	D1	H	H1	H2	R	d	d1	M
C2200-22-16- 20	22	16	20	15	7	40	26	20	11	6.9	6	11	6.6	M6X25
C2200-22-16- 40			40											
C2200-27-20- 25	27	20	25	19		45	31	22	13					
C2200-27-20- 50			50											
C2200-36-25- 32	36	25	32	27	9	50	35	25	14		8			M6X30
C2200-36-25- 63			63											
C2200-46-32- 40	46	32	40	35	11	63	45	32	19	9		15	9	M8X40
C2200-46-32- 80			80											
C2200-56-40- 50	56	40	50	40	15	85	60	36	22	11	10	18	11	M10X45
C2200-56-40-100			100											
C2200-66-50- 56	66	50	56	48	18	100	74	40	24	13		20	13	M12X50
C2200-66-50-112			112											

Code	L	D2	D	D1	L2	L3	H	H2	H3	R	d	d1	M
C2201-22-16	22	16	40	26	15	7	20	7.0	12	6	11	6.6	M6X25
C2201-27-20	27	20	45	31	19		22		14				
C2201-36-25	36	25	50	35	27	9	25		15	8			M6X30
C2201-46-32	46	32	63	45	35	11	32	9	20		15	9	M8X40
C2201-56-40	56	40	85	60	40	15	36	11	23	10	18	11	M10X45
C2201-66-50	66	50	100	74	48	18	40	13	25		20	13	M12X50

C2202

定位块

Square interlocks

Mat：1.2379 / 58-62HRC

Compability:HASCO Z071…/1

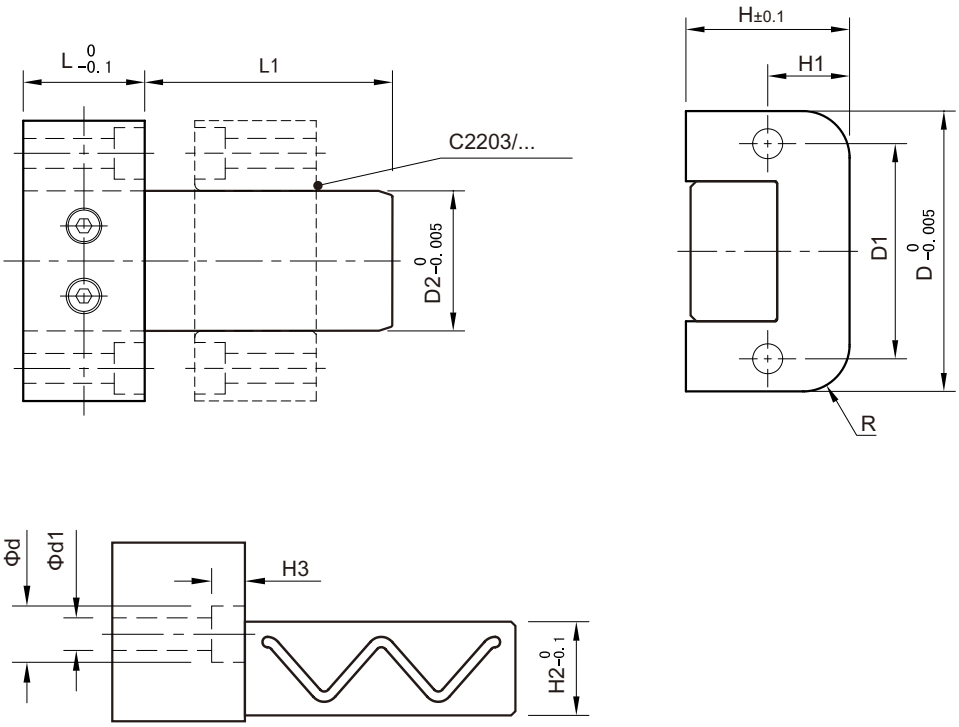

Code	D2	L	L1	Typ	D	D1	H	H1	H2	H3	d	d1	R
C2202-20-22-22 -1	20	22	22	1	47	34	27	13.5	13.5	7	11	6.6	6
C2202-20-22-40 -1			40										
C2202-25-27-40 -1	25	27			52	39	30	15	14.5				8
C2202-25-27-63 -1			63										
C2202-32-36-40 -1	32	36	40		67	49	40	20	19.5	9	15	9	
C2202-32-36-80 -1			80										
C2202-40-46-50 -1	40	46	50		88	63	50	23	22.5	11	18	11	10
C2202-40-46-100-1			100										
C2202-50-50-56 -1	50	56	56		100	75	55	27.5	24.5	13	20	14	
C2202-50-56-112-1			112										

C2203

定位块
Square interlocks
Mat：1.2343 / 50-54HRC
Compability:HASCO Z072…/1

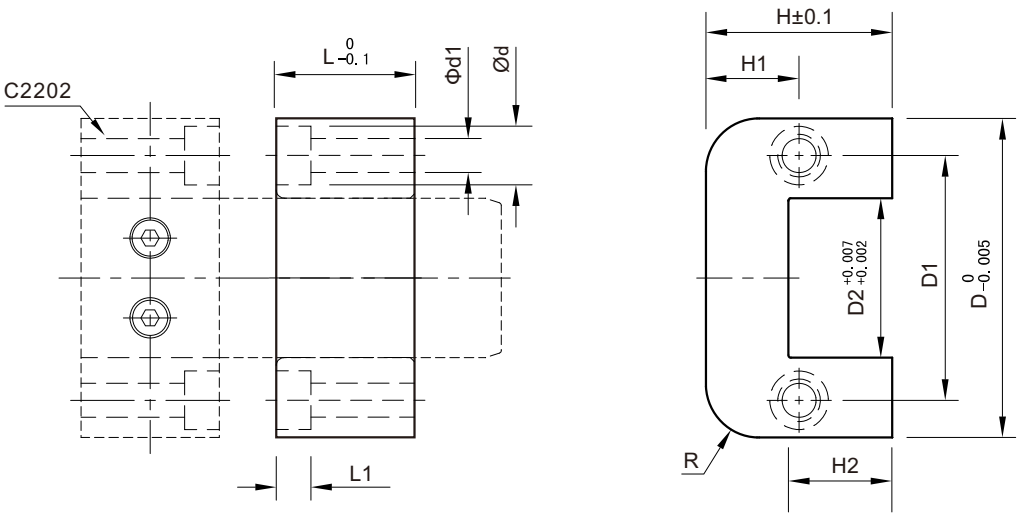

Code	D2	L	Typ	D	D1	H	H1	H2	L1	R	d	d1
C2203-20-22-1	20	22	1	47	34	27	13.5	14	7	6	11	6.6
C2203-25-27-1	25	27		52	39	30	15	15		8		
C2203-32-36-1	32	36		67	49	40	20	20	9	10	15	9
C2203-40-46-1	40	46		88	63	50	23	23	11		18	11
C2203-50-56-1	50	56		100	75	55	27.5	25	13		20	14

C2204

定位块

Square interlocks

Mat：1.2379 / 58-62HRC / DLC

Compability:HASCO Z071…/2

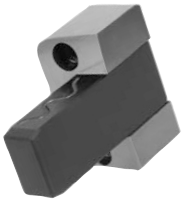

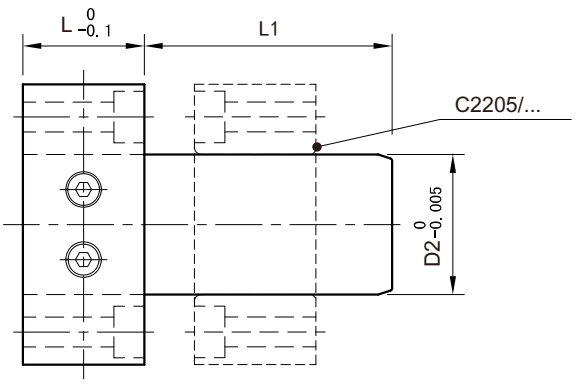

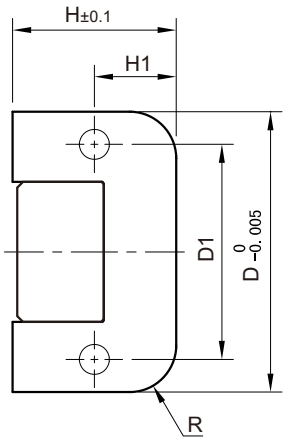

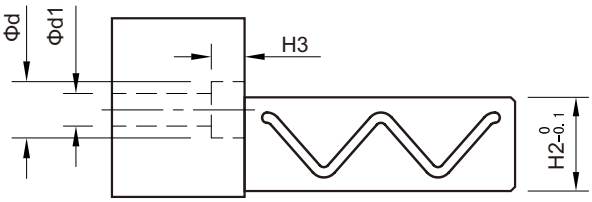

Code	D2	L	L1	Typ	D	D1	H	H1	H2	H3	d	d1	R
C2204-20-22-22 -2	20	22	22	2	47	34	27	13.5	13.5	7	11	6.6	6
C2204-20-22-40 -2			40										
C2204-25-27-40 -2	25	27			52	39	30	15	14.5				8
C2204-25-27-63 -2			63										
C2204-32-36-40 -2	32	36	40		67	49	40	20	19.5	9	15	9	
C2204-32-36-80 -2			80										
C2204-40-46-50 -2	40	46	50		88	63	50	23	22.5	11	18	11	10
C2204-40-46-100-2			100										
C2204-50-50-56 -2	50	56	56		100	75	55	27.5	24.5	13	20	14	
C2204-50-56-112-2			112										

C2205

定位块
Square interlocks
Mat：1.2343 / 50-54HRC/DLC
Compability:HASCO Z072…/2

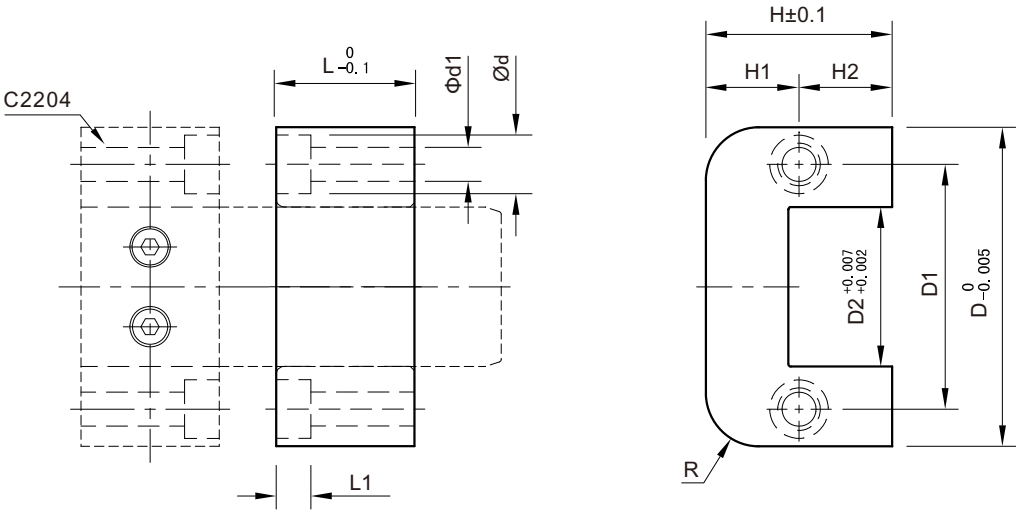

Code	D2	L	Typ	D	D1	H	H1	H2	L1	R	d	d1
C2205-20-22-2	20	22	2	47	34	27	13.5	14	7	6	11	6.6
C2205-25-27-2	25	27		52	39	30	15	15		8		
C2205-32-36-2	32	36		67	49	40	20	20	9	10	15	9
C2205-40-46-2	40	46		88	63	50	23	23	11		18	11
C2205-50-56-2	50	56		100	75	55	27.5	25	13		20	14

C2300

定位块
Square interlocks
Mat：1.2343 / 50-54HRC
Compability:STRACK Z50

C2300-0

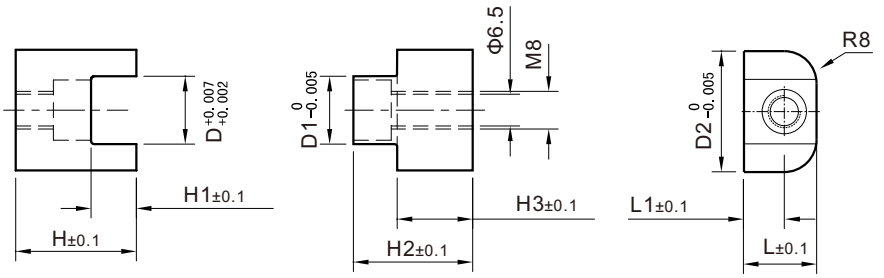

C2300-1

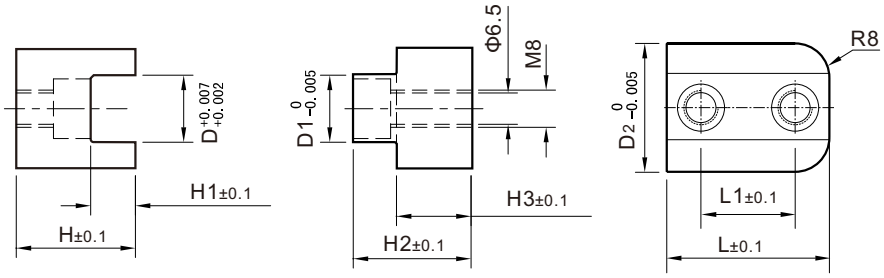

C2300-02

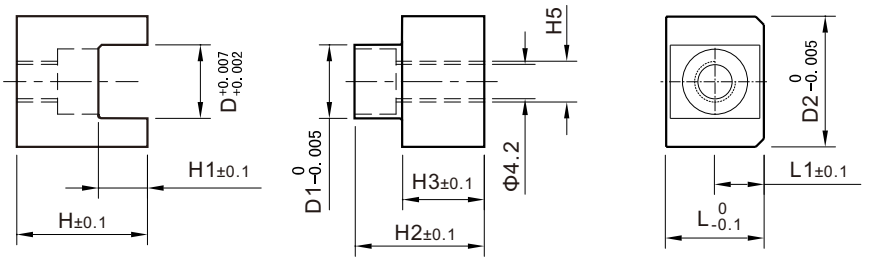

C2300-05

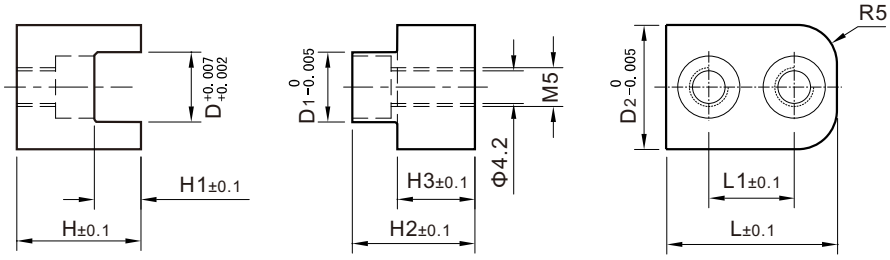

C2300

定位块
Square interlocks
Mat：1.2343 / 50-54HRC
Compability:STRACK Z50

C2300-2

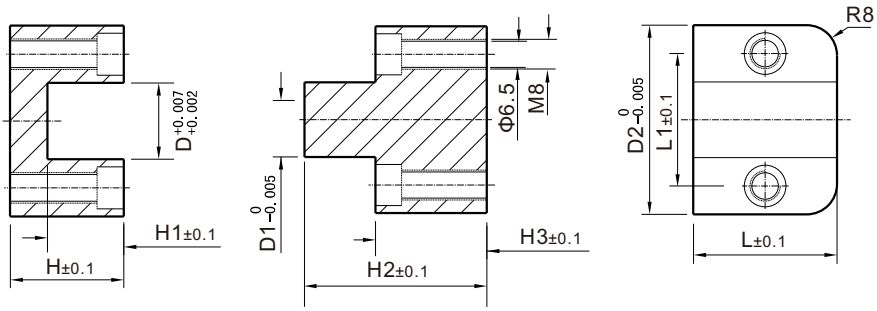

C2300-3

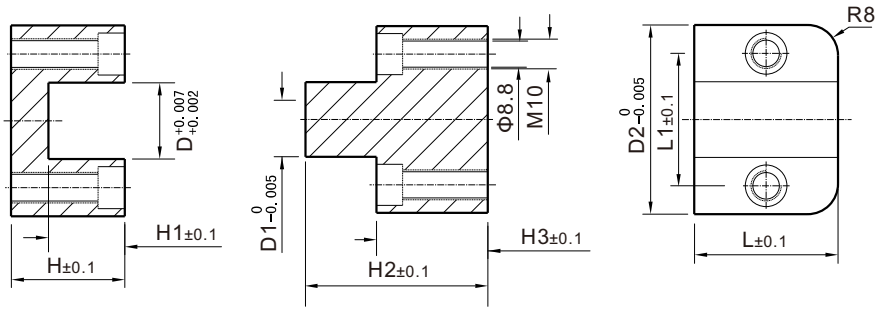

Code	D	D1	D2	H	H1	H2	H3	L	L1	R	M
C2300- 0	16	16	30	26	14.8	30	15.5	18	10	8	M 8
C2300- 1								38	22		
C2300-02	9	9	16	16	6	15.8	10	12	6	-	M 5
C2300-05								22	11	5	
C2300- 2	20	20	50	29.8	20	48.8	29.8	38	35	8	M 8
C2300- 3	30	30	75	39.8	25	63.8	39.8		52		M10

C2301

定位块

Square interlocks

Mat：1.2343 / 50-54HRC / DLC

Compability:STRACK Z51

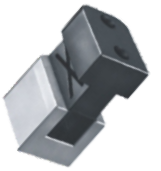

C2301-0

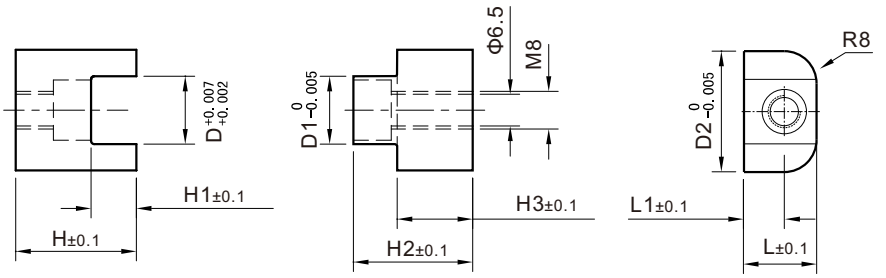

C2301-1

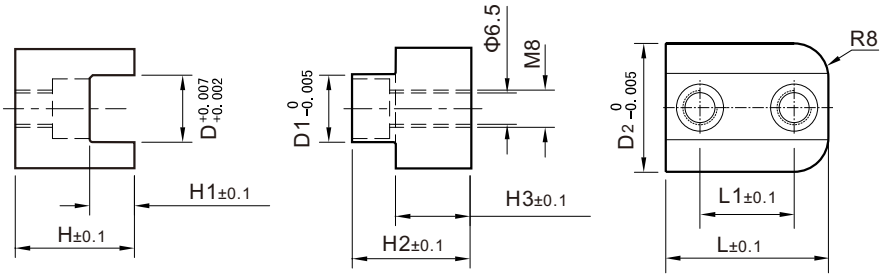

C2301-02

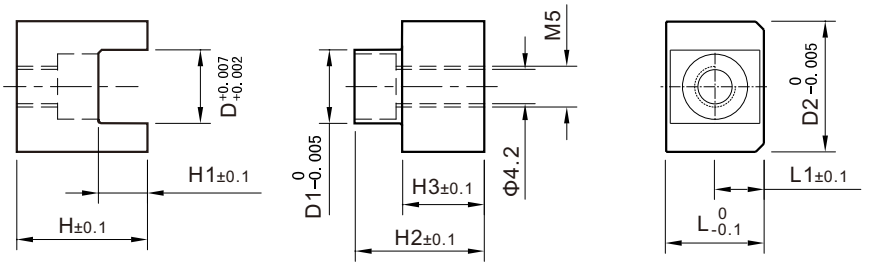

C2301-05

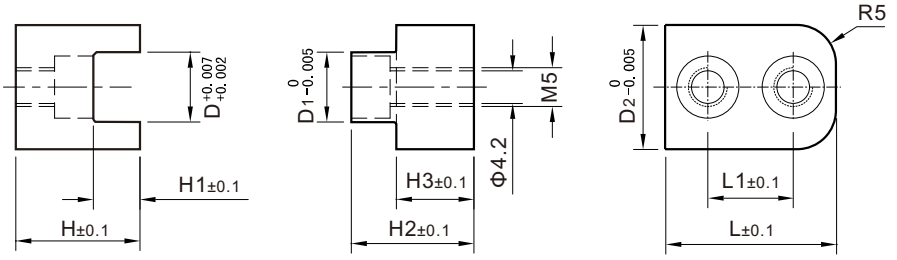

C2301

定位块
Square interlocks
Mat：1.2343 / 50-54HRC / DLC
Compability:STRACK Z51

C2301-2

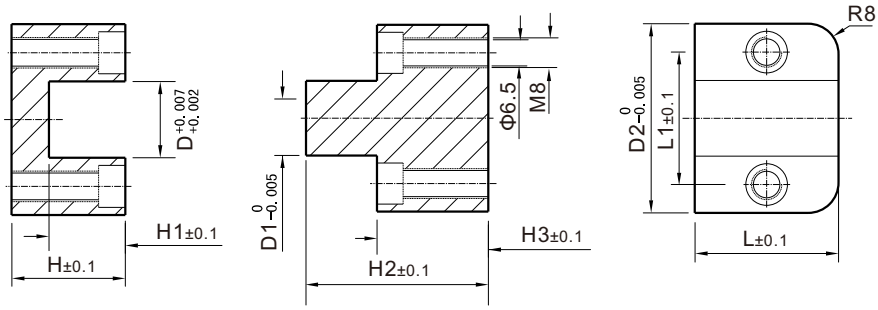

C2301-3

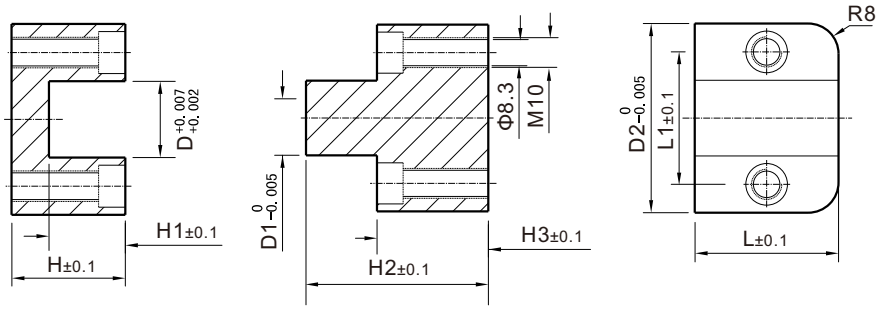

Code	D	D1	D2	H	H1	H2	H3	L	L1	R	M
C2301- 0	16	16	30	26	14.8	30	15.5	18	10	8	M 8
C2301- 1								38	22		
C2301-02	9	9	16	16	6	15.8	10	12	6	-	M 5
C2301-05								22	11	5	
C2301- 2	20	20	50	29.8	20	48.8	29.8	38	35	8	M 8
C2301- 3	30	30	75	39.8	25	63.8	39.8		52		M10

C2310

定位块
Square interlocks
Mat：1.2510 / 56-58HRC
Compability:HASC0 Z18

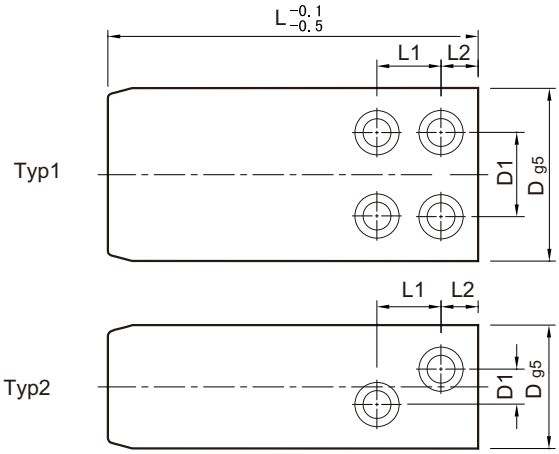

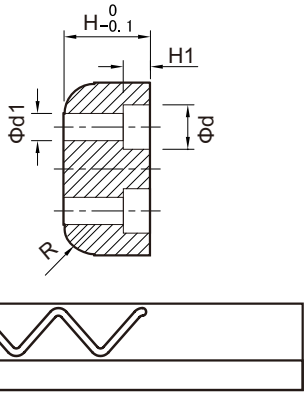

Code	D	H	L	D1	H1	L1	L2	Typ	R	d	d1
C2310-20 -18- 50			50								
C2310-20 -18- 75	20	18	75	7	5.7	9	8	1		10	5.5
C2310-20 -18- 90			90								
C2310-32 -22- 70			70						6		
C2310-32 -22- 90			90								
C2310-32 -22-112	32	22	112	14	6.8	18	9			11	6.6
C2310-32 -22-125			125								
C2310-32 -22-150			150								
C2310-50 -30- 90			90								
C2310-50 -30-125			125								
C2310-50 -30-150	50	30	150	24	9	21	12		8	15	9
C2310-50 -30-175			175								
C2310-50 -30-200			200								
C2310-63 -32-112			112								
C2310-63 -32-150			150								
C2310-63 -32-175	63	32	175	30				2	10		
C2310-63 -32-200			200								
C2310-63 -32-250			250		11	26	15			18	11
C2310-80 -35-112			112								
C2310-80 -35-150			150								
C2310-80 -35-175	80	35	175	44					12		
C2310-80 -35-200			200								
C2310-80 -35-250			250								
C2310-100-50-175			175								
C2310-100-50-200	100	50	200	55		32	18				
C2310-100-50-250			250		13				15	20	13.5
C2310-120-65-200			200								
C2310-120-65-250	120	65	250	75		35	20				
C2310-120-65-300			300								

C2311

定位块
Square interlocks
Mat：1.2510 / 56-58HRC
Compability:HASC0 Z19

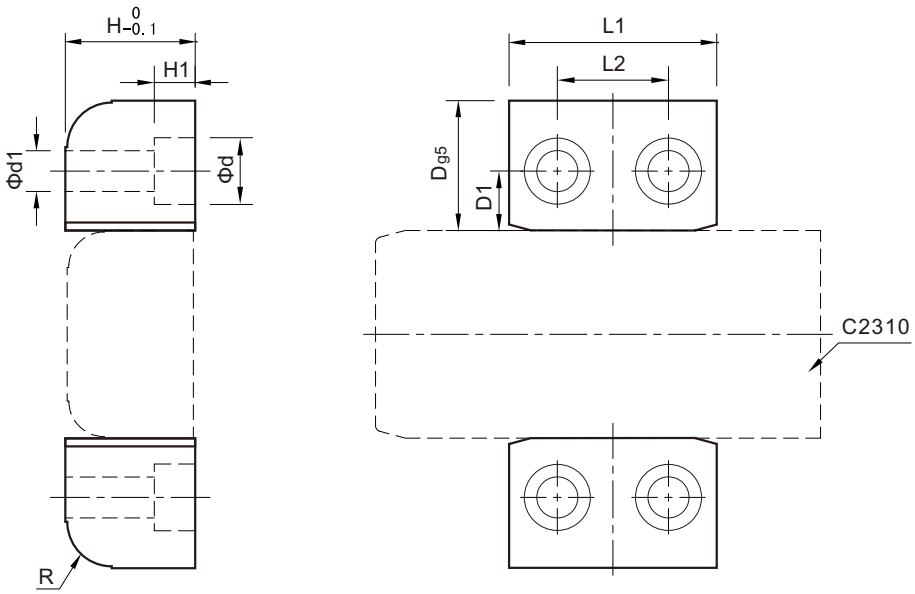

Code	D	H	L1	L2	D1	H1	R	d	d1
C2311-18-18-27	**18**	**18**	**27**	12	8	5.7	6	10	5.5
C2311-20-22-36	**20**	**22**	**36**	16	10	6.8		11	6.6
C2311-25-30-46	**25**	**30**	**46**	24	11	9	8	15	9
C2311-32-32-56	**32**	**32**	**56**	30	16	11	10	18	11
C2311-35-35-56	**35**	**35**					12		
C2311-40-50-76	**40**	**50**	**76**	40	17	13	15	20	13.5
C2311-45-65-86	**45**	**65**	**86**	50	20				

C2320

定位块
Square interlocks
Mat：1.2343 / 50-54HRC
Compability:STRACK Z46

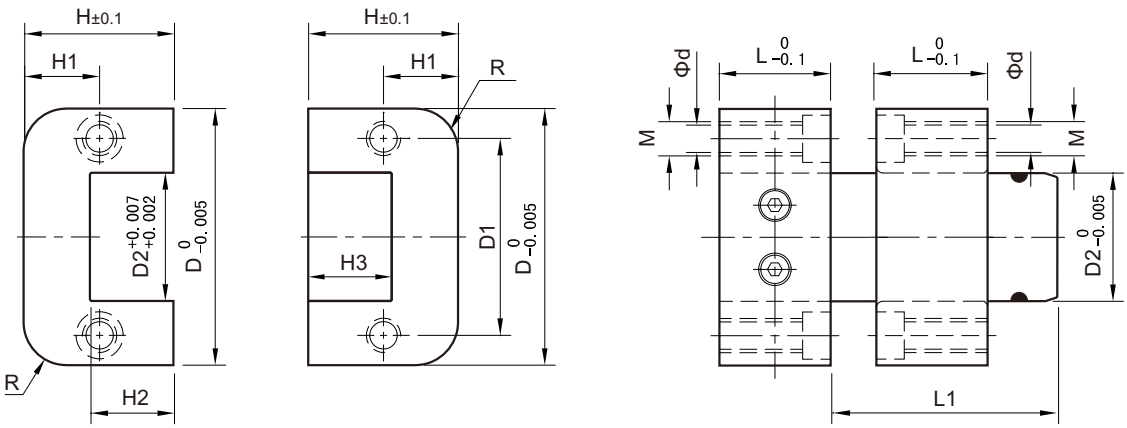

Code	D2	L	L1	D	D1	H	H1	H2	H3	R	d	M
C2320-16-20- 20	16	20	20	45	30	22	11	12	11.5	8	6.8	M 8
C2320-16-20- 40			40									
C2320-30-26- 40	30	26		60	46	35	17.5	20	19.5	10		
C2320-30-26- 63			63									
C2320-48-36- 32	48	36	32	100	74	46	23	26	25.5	12.5	10.3	M12
C2320-48-36- 50			50									
C2320-48-36- 63			63									
C2320-48-36- 80			80									
C2320-77-56- 50	77	56	50	150	114	60	30	36	35.5	16	14	M16
C2320-77-56- 71			71									
C2320-77-56-100			100									

C2400

定位块
Square interlocks
Mat：1.2379 / 54-58HRC
Compability:MEUSBURGER E1304

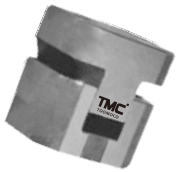

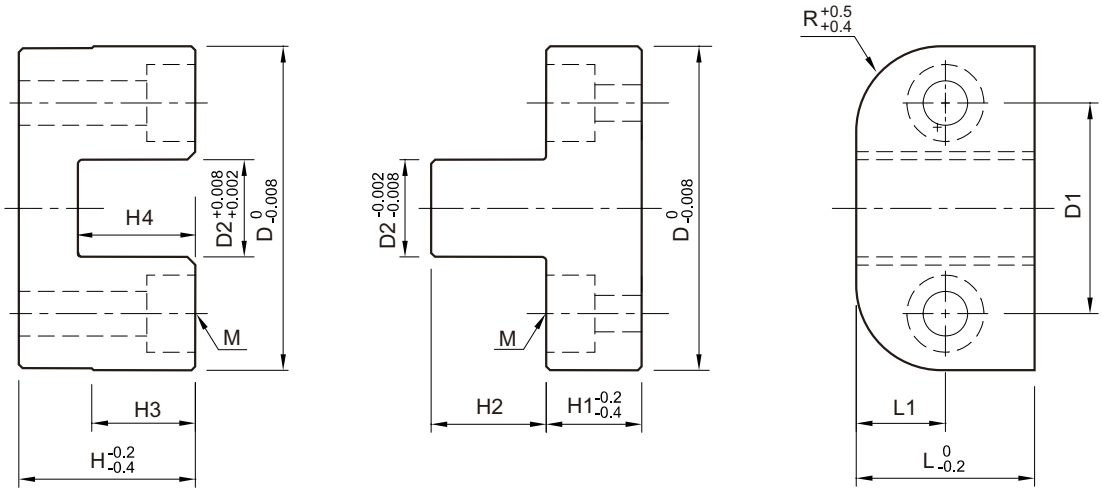

Code	D	D1	D2	H	H1	H2	H3	H4	L	L1	R	M
C2400-34	**34**	22	10	18	10	12	11	12.5	18	9	8	M4
C2400-40	**40**	26	12	22	12	14	13	14.5	22	11	10	M5
C2400-50	**50**	34	18	30	15	18	17	18.5	30	15		M6
C2400-64	**64**	42	22	40	18	24	23	24.5	40	20		M8
C2400-72	**72**	48	26	46	20	28	27	28.5	52	26		
C2400-96	**96**	66	36	57	22	36	31	36.5	56	28		M10

C2401

定位块

Square interlocks

Mat：1.2379 / 54-58HRC / DLC

Compability:MEUSBURGER E1304

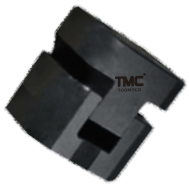

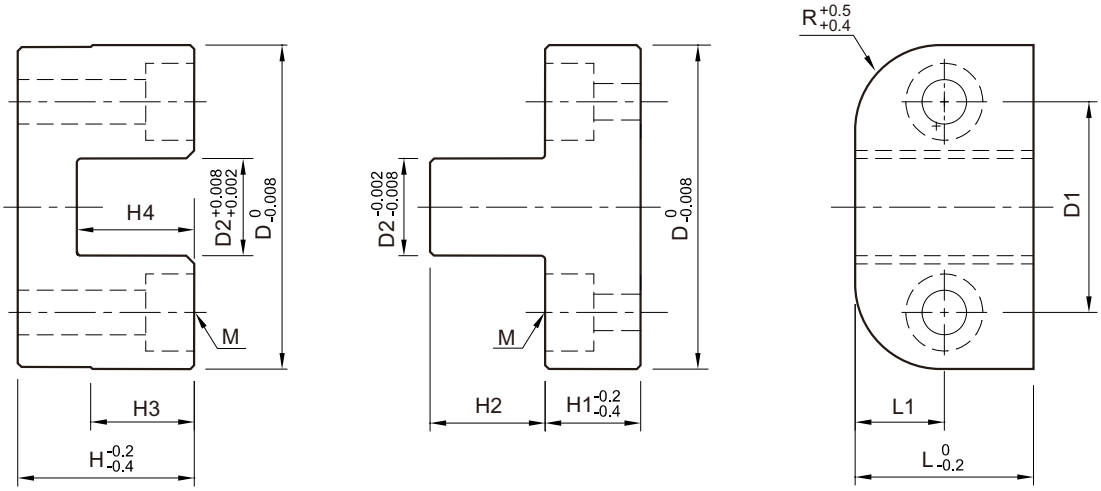

Code	D	D1	D2	H	H1	H2	H3	H4	L	L1	R	M
C2401-34	**34**	22	10	18	10	12	11	12.5	18	9	8	M4
C2401-40	**40**	26	12	22	12	14	13	14.5	22	11	10	M5
C2401-50	**50**	34	18	30	15	18	17	18.5	30	15		M6
C2401-64	**64**	42	22	40	18	24	23	24.5	40	20		M8
C2401-72	**72**	48	26	46	20	28	27	28.5	52	26		
C2401-96	**96**	66	36	57	22	36	31	36.5	56	28		M10

C2403

定位块
Square interlocks
Mat：1.2379 / 54-58HRC
Compability:MEUSBURGER E1306

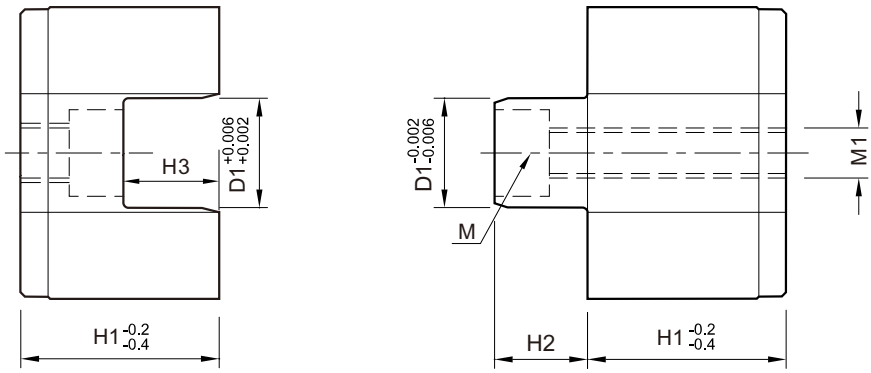

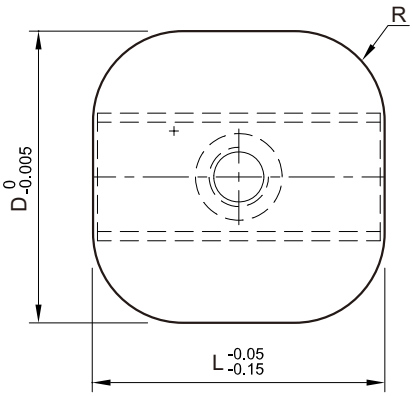

Code	D	D1	L	H1	H2	H3	R max.	M	M1
C2403-16	**16**	8	16	12	6	6.5	3.25	M3	M4
C2403-20	**20**	10	20	14	7	7.5	4.5	M4	M5
C2403-25	**25**	12	25	16	8	8.5	5.5	M5	M6
C2403-32	**32**	16	32	20	10	10.5	7.2	M6	M8
C2403-40	**40**	20	40	23	12	12.5	8.2		

C2404

定位块

Square interlocks

Mat：1.2379 / 54-58HRC / DLC

Compability:MEUSBURGER E1306

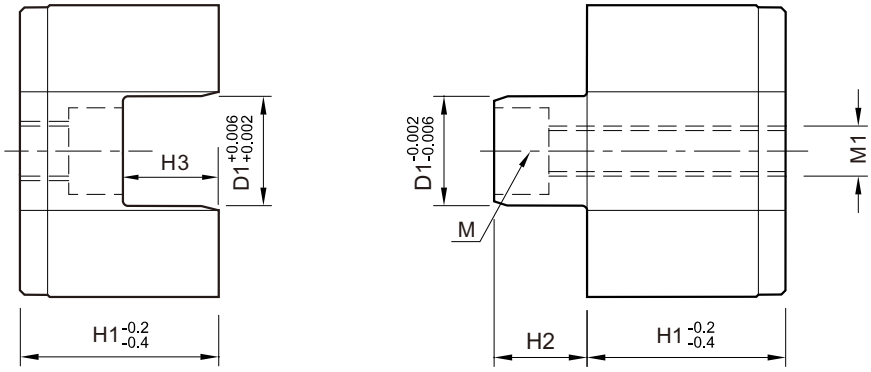

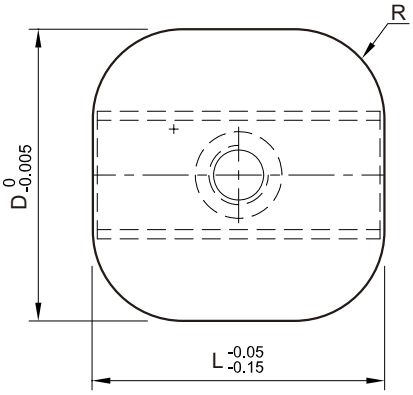

Code	**D**	D1	L	H1	H2	H3	R max.	M	M1
C2404-16	**16**	8	16	12	6	6.5	3.25	M3	M4
C2404-20	**20**	10	20	14	7	7.5	4.5	M4	M5
C2404-25	**25**	12	25	16	8	8.5	5.5	M5	M6
C2404-32	**32**	16	32	20	10	10.5	7.2	M6	M8
C2404-40	**40**	20	40	23	12	12.5	8.2		

C2405

定位块

Square interlocks DLC

Mat：1.2379 / 54-58HRC / DLC

Compability:MEUSBURGER E1308

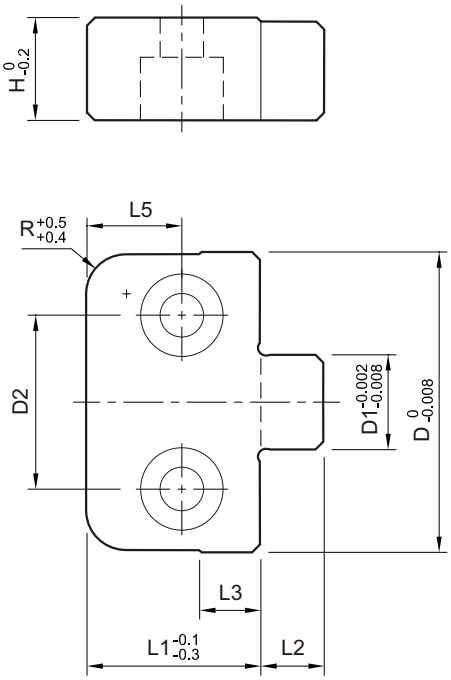

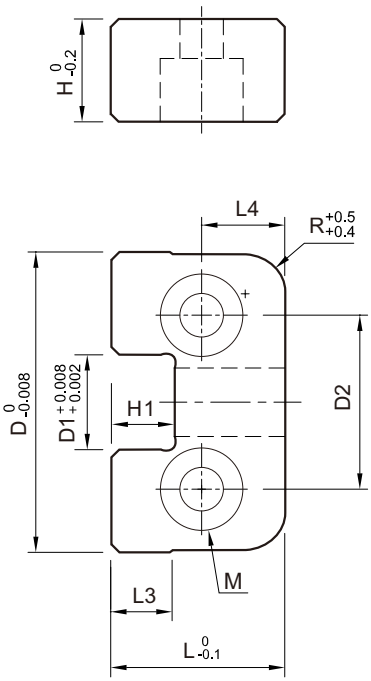

Code	**D**	D1	D2	H	H1	L	L1	L2	L3	L4	L5	R	M
C2405-40	**40**	10	26	10	11.5	17	14	11	6	8.5	7	4	M 5
C2405-46	**46**	12	30	12	12.5	22	17	12	7	11	8.5	5	M 6
C2405-50	**50**	14	34	16	16.5	27	22	16	10	13.5	11	6	
C2405-60	**60**	18	40	20	20.5	36	27	20	14	18	13.5	8	M 8
C2405-76	**76**	24	50	25	25.5	40	36	25	18	20	18	10	M10

C2406

定位块

Square interlocks

Mat：1.2379 / 54-58HRC / DLC

Compability:MEUSBURGER E1308

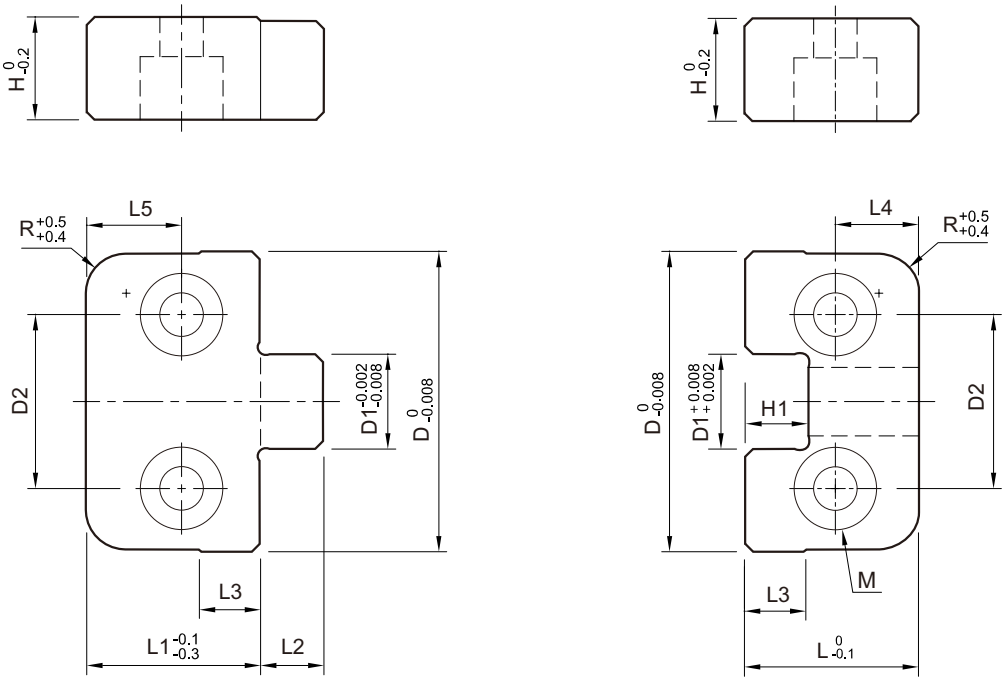

Code	D	D1	D2	H	H1	L	L1	L2	L3	L4	L5	R	M
C2405-40	**40**	10	26	10	11.5	17	14	11	6	8.5	7	4	M 5
C2405-46	**46**	12	30	12	12.5	22	17	12	7	11	8.5	5	M 6
C2405-50	**50**	14	34	16	16.5	27	22	16	10	13.5	11	6	
C2405-60	**60**	18	40	20	20.5	36	27	20	14	18	13.5	8	M 8
C2405-76	**76**	24	50	25	25.5	40	36	25	18	20	18	10	M10

C2410

定位块
Square interlocks
Mat：1.2510 / 58-62HRC
Compability:MEUSBURGER E1320

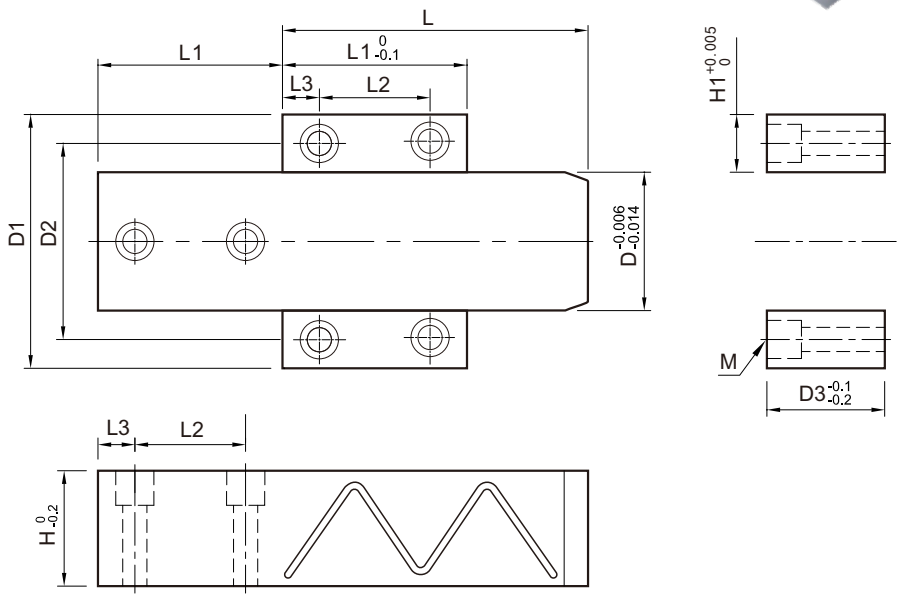

Code	D	H1	L	D1	D2	D3	H	L1	L2	L3	M
C2410-16-10- 44	16	10	44	36	26	14.2	14	26	14	6	M 4
C2410-16-10- 54			54								
C2410-16-10- 64			64								
C2410-25-12- 54	25	12	54	49	37	22.3	22	34	18	8	M 5
C2410-25-12- 74			74								
C2410-25-12- 94			94								
C2410-34-16- 54	34	16	54	66	50	30.5	30	44	28		M 6
C2410-34-16- 94			94								
C2410-34-16-134			134								
C2410-34-16-174			174								
C2410-46-20- 74	46	20	74	86	66	38.8	38	62	38	12	M 8
C2410-46-20-114			114								
C2410-46-20-154			154								
C2410-46-20-194			194								
C2410-60-25- 94	60	25	94	110	85	51.2	50	80	48	16	M10
C2410-60-25-134			134								
C2410-60-25-174			174								
C2410-60-25-214			214								
C2410-60-25-254			254								
C2410-80-32-114	80	32	114	144	112	71.6	70	98	58	20	M12
C2410-80-32-154			154								
C2410-80-32-194			194								
C2410-80-32-234			234								
C2410-80-23-274			274								
C2410-80-32-314			314								

C2910

定位柱
Round locating unitsaa
Mat：1.2343 / 50-54HRC
Compability:HASCO Z05

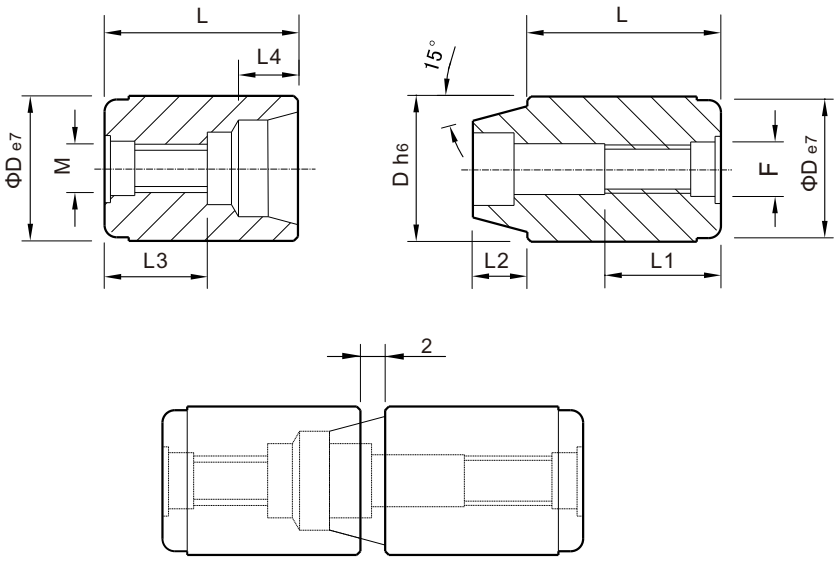

Code	D	L	L1	L2	L3	L4	M	F
C2910-10	**10**	11.5	6.6	4	3.5	5	M3×12	M3×20
C2910-12	**12**	17	9.6	4.5	8.5		M3×16	M3×25
C2910-14	**14**		12.4	6	6	7	M4×14	M4×25
C2910-16	**16**				5.8			
C2910-20	**20**	27	19.7	9	10.6	10	M6×20	M6×40
C2910-25	**25**			10	9.2	11		
C2910-26	**26**							
C2910-30	**30**	36	25	14	12.2	16	M8×25	M8×55
C2910-32	**32**							
C2910-42	**42**	46	27	18	16.8	20	M8×30	M8×70

TMC®
TOOMOCO

3

Ejector Pins Series

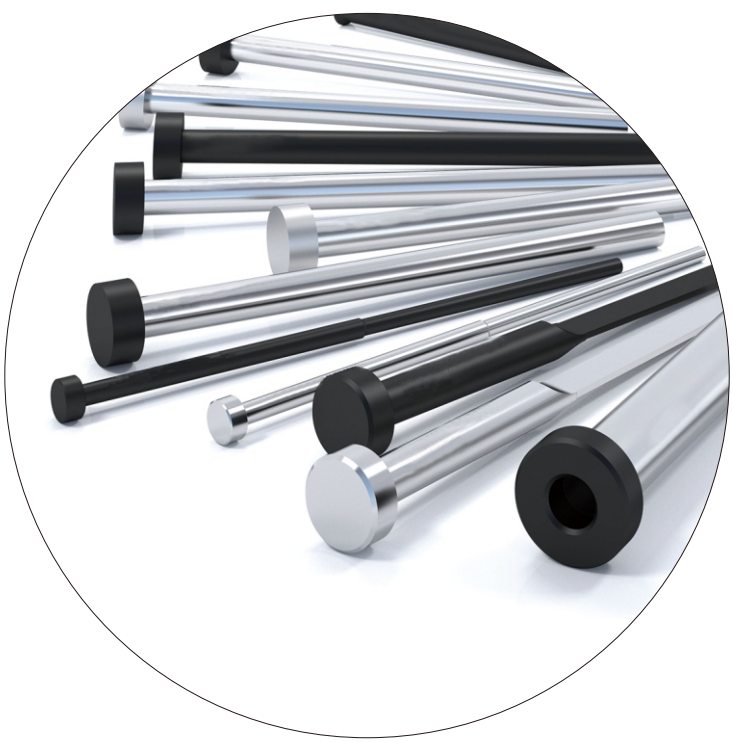

C3000 3.02
顶针
Ejector pins
HASCO Z40

C3100 3.06
有托顶针
Ejector pins
HASCO Z44

C3101 3.07
有托顶针
Ejector pins
HASCO Z441

C3200 3.09
扁顶针
Flat jector pins
HASCO Z46

C3201 3.10
扁顶针
Flat jector pins
HASCO Z465

C3600 3.13
司筒
Ejector sleeves
HASCO Z45

C3000

顶针
Ejector pins
Mat：1.2516
Compability: HASCO Z40

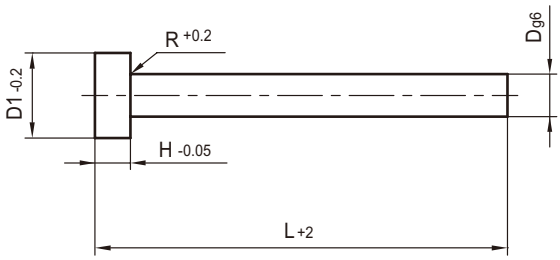

3

Code	D1	L	D	H	R
C3000-1 -100	1	100	2.5	1.2	0.2
		150			
		200			
		250			
C3000-1.2-100	1.2	100			
		150			
		200			
		250			
C3000-1.5-100	1.5	100	3	1.5	
		150			
		200			
		250			
		300			
		350			
C3000-2 -100	2	100	4	2	
		150			
		200			
		250			
		300			
		350			
		400			
C3000-2.5-100	2.5	100	5		0.3
		150			
		200			
		250			
		300			
		350			
		400			
C3000-3 -100	3	100	6	3	
		150			
		200			
		250			
		300			
		350			
		400			
		450			
		500			

Code	D1	L	D	H	R
C3000-3.5-100	3.5	100	7	3	0.3
		150			
		200			
		250			
		300			
		350			
		400			
		450			
		500			
C3000-4 -100	4	100	8		
		150			
		200			
		250			
		300			
		350			
		400			
		450			
		500			
		550			
		600			
C3000-4.5-100	4.5	100			
		150			
		200			
		250			
		300			
		350			
		400			
		450			
		500			
		550			
		600			
C3000-5 -100	5	100	10		
		150			
		200			
		250			
		300			
		350			

C3000

顶针
Ejector pins
Mat：1.2516
Compability:HASCO Z40

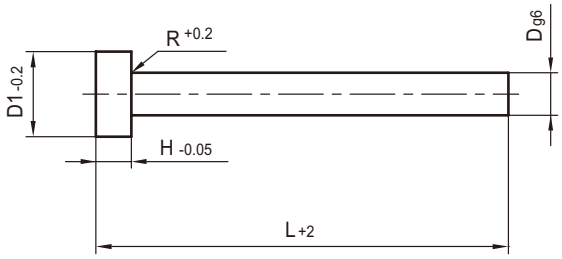

Code	D1	L	D	H	R
C3000-5 -400	5	400	10	3	0.3
		450			
		500			
		550			
		600			
C3000-5.5-100	5.5	100			
		150			
		200			
		250			
		300			
		350			
		400			
		450			
		500			
		550			
		600			
C3000-6 -100	6	100	12	5	0.5
		150			
		200			
		250			
		300			
		350			
		400			
		450			
		500			
		550			
		600			
C3000-6.5-100	6.5	100			
		150			
		200			
		250			
		300			
		350			
		400			
		450			
		500			
		550			

Code	D1	L	D	H	R
C3000-6.5-600	6	100	12	5	0.5
C3000-7 -100	7	100			
		150			
		200			
		250			
		300			
		350			
		400			
		450			
		500			
		550			
		600			
C3000-7.5-100	7.5	100			
		150			
		200			
		250			
		300			
		350			
		400			
		450			
		500			
		550			
		600			
C3000-8 -100	8	100	14		
		150			
		200			
		250			
		300			
		350			
		400			
		450			
		500			
		550			
		600			
C3000-8.5-100	8.5	100			
		150			
		200			

C3000

顶针
Ejector pins
Mat：1.2516
Compability:HASCO Z40

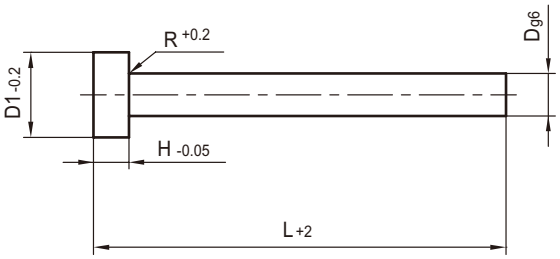

Code	D1	L	D	H	R
C3000-8.5-250	8.5	250	14	5	0.5
		300			
		350			
		400			
		450			
		500			
		550			
		600			
C3000-9 -100	9	100			
		150			
		200			
		250			
		300			
		350			
		400			
		450			
		500			
		550			
		600			
C3000-9.5-100	9.5	100			
		150			
		200			
		250			
		300			
		350			
		400			
		450			
		500			
		550			
		600			
C3000-10 -100	10	100	16		
		150			
		200			
		250			
		300			
		350			
		400			

Code	D1	L	D	H	R
C3000-10 -350	10	350	16	5	0.5
		400			
		450			
		500			
		550			
		600			
		650			
		700			
C3000-11 -100	11	100			
		150			
		200			
		250			
		300			
		350			
		400			
		450			
		500			
		550			
		600			
		650			
		700			
C3000-12 -100	12	100	18	7	0.8
		150			
		200			
		250			
		300			
		350			
		400			
		450			
		500			
		550			
		600			
		650			
		700			
C3000-13 -100	13	100			
		150			
		200			

C3000

顶针
Ejector pins
Mat：1.2516
Compability:HASCO Z40

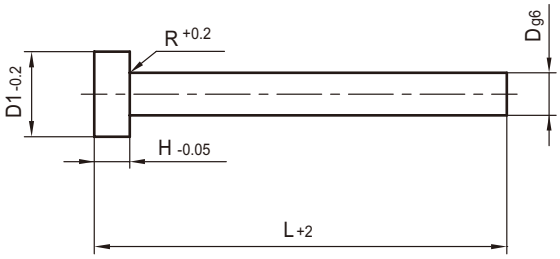

Code	D1	L	D	H	R
C3000-13 -250	13	250	18	7	0.8
		300			
		350			
		400			
		450			
		500			
		550			
		600			
		650			
		700			
C3000-14 -100	14	100	22		
		150			
		200			
		250			
		300			
		350			
		400			
		450			
		500			
		550			
		600			
		650			
		700			
C3000-15 -100	15	100			
		150			
		200			
		250			
		300			
		350			
		400			
		450			
		500			
		550			
		600			
		650			
		700			
C3000-16 -100	16	100			

Code	D1	L	D	H	R
C3000-16 -150	16	150	22	7	0.8
		200			
		250			
		300			
		350			
		400			
		450			
		500			
		550			
		600			
		650			
		700			
C3000-18 -100	18	100			
		150			
		200			
		250			
		300			
		350			
		400			
		450			
		500			
		550			
		600			
		650			
		700			
C3000-20 -100	20	100	26	8	1
		150			
		200			
		250			
		300			
		350			
		400			
		450			
		500			
		550			
		600			
		650			

C3100

有托顶针
Ejector pins
Mat：1.2343
Compability:HASCO Z44

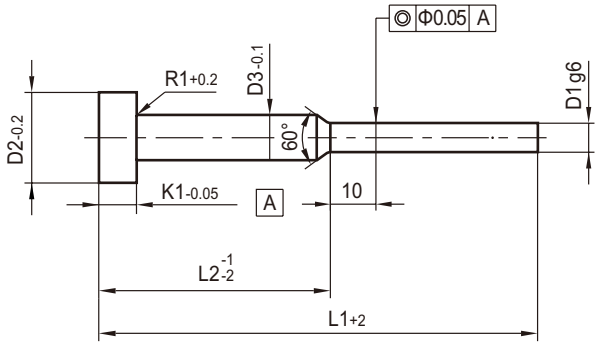

Code	B	L	D1	D2	L1	H	R
C3100-0.6- 80	0.6	80	4	2	35	2	0.2
		100			50		
		125					
		160			75		
		200					
C3100-0.7- 80	0.7	80			35		
		100			50		
		125					
		160			75		
		200					
C3100-0.8- 80	0.8	80			35		
		100			50		
		125					
		160			75		
C3100-0.9- 80	0.9	80			35		
		100			50		
		125					
		160			75		
C3100-1 - 80	1	80			35		
		100			50		
		125					
		160			75		
		200					
C3100-1.1- 80	1.1	80			35		
		100			50		
		125					
		160			75		
	1.2	80			35		
C3100-1.2-100		100			50		
		125					
		160			75		
C3100-1.3- 80	1.3	80			35		
		100			50		
		125					
		160			75		
		200					
C3100-1.4- 80	1.4	80			35		
		100			50		

Code	B	L	D1	D2	L1	H	R
C3100-1.4-125	1.4	125	4	2	50	2	0.2
		160			75		
C3100-1.5- 80	1.5	80	6	3	35	3	0.3
		100			50		
		125					
		160			75		
		200					
C3100-1.5- 80	1.6	80			35		
		100			50		
		125					
		160			75		
		200					
C3100-1.7- 80	1.7	80			35		
		100			50		
		125					
		160			75		
		200					
C3100-1.8- 80	1.8	80			35		
		100			50		
		125					
		160			75		
		200					
C3100-1.9- 80	1.9	80			35		
		100			50		
		125					
		160			75		
		200					
C3100-2 -100	2	100			50		
		125					
		160			75		
		200					
C3100-2.2-125	2.2	125			50		
		160			75		
		200					
C3100-2.5-125	2.5	125			50		
		160			75		
		200					

C3101

有托顶针
Ejector pins
Mat：1.2516
Compability:HASCO Z441

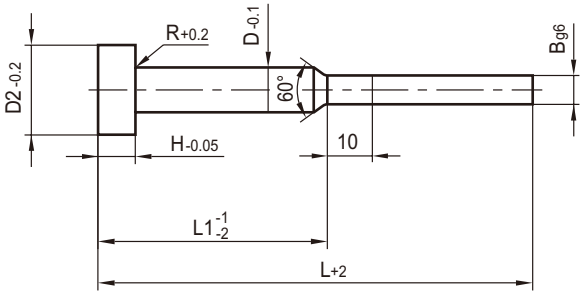

Code	B	L	D1	D2	L1	H	R
C3101-0.5- 80	0.5	80	4	2	35	2	0.2
		100			50		
		125					
		160			75		
C3100-0.6- 80	0.6	80			35		
		100			50		
		125					
		160			75		
		200					
C3100-0.7- 80	0.7	80			35		
		100			50		
		125					
		160			75		
		200					
C3100-0.8- 63	0.8	63			25		
		80			35		
		100			50		
		125					
		160			75		
		200					
		250					
C3100-0.9- 63	0.9	63			25		
		80			35		
		100			50		
		125					
		160			75		
		200					

Code	B	L	D1	D2	L1	H	R
C3101-1 - 63	1	63	4	2	25	2	0.2
		80			35		
		100			50		
		125					
		160			75		
		200					
		250					
		275					
C3101-1.1- 63	1.1	63			25		
		80			35		
		100			50		
		125					
		160			75		
		200					
C3101-1.2- 63	1.2	63			25		
		80			35		
		100			50		
		125					
		160			75		
		200					
		250					
		275					
C3101-1.3- 63	1.3	63			25		
		80			35		
		100			50		
		125					
		160			75		

C3101

有托顶针
Ejector pins
Mat：1.2516
Compability:HASCO Z441

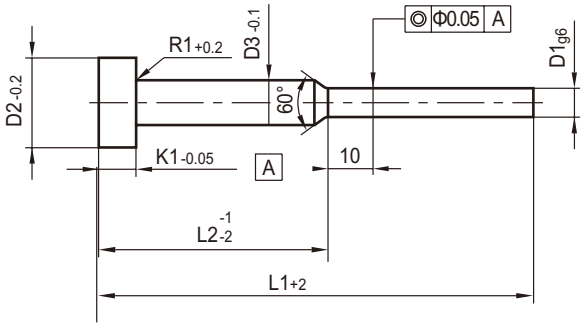

Code	D1	L1	D2	D3	L2	K1	R1
C3101-1.3-200	1.3	200	4	2	75	2	0.2
C3100-1.4- 63	1.4	63			25		
		80			35		
		100			50		
		125					
		160			75		
		200					
C3100-1.5- 63	1.5	63	6	3	25	3	0.3
		80			35		
		100			50		
		125					
		160			75		
		200					
		250			100		
		275			125		
		315			160		
C3100-1.6- 80	1.6	80			35		
		100			50		
		125					
		160			75		
		200					
C3100-1.7- 80	1.7	80			35		
		100			50		
		125					
		160			75		
		200					
C3100-1.8- 80	1.8	80			35		

Code	D1	L1	D2	D3	L2	K1	R1
C3101-1.8- 100	1.8	100	6	3	50	3	0.3
		125					
		160			75		
		200					
C3101-1.9- 80	1.9	80			35		
		100			50		
		125					
		160			75		
		200					
C3101- 2- 80	2	80			35		
		100			50		
		125					
		160			75		
		200					
		250			100		
		275			125		
		315			160		
C3101-2.5- 100	2.5	100			50		
		125					
		160			75		
		200					
		250			100		
		275			125		
		315			160		

C3200

扁顶针

Flat jector pins

Mat：1.2343

Compability:HASCO Z46

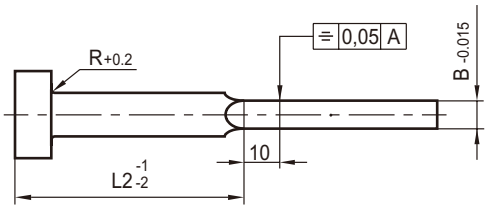

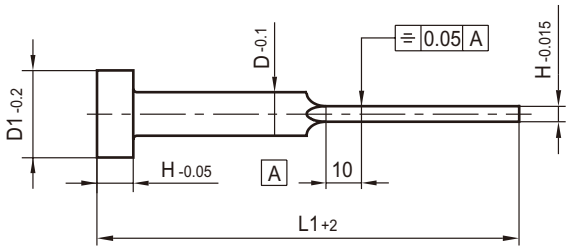

Code	B	H	L	D	D1	L1	H	R
C3200-3.8-0.8- 63	3.8	0.8	63	4.2	8	30	3	0.3
			80			40		
			100			50		
			125			60		
		1	63			30		
			80			40		
			100			50		
			125			60		
			160			80		
		1.2	80			40		
			100			50		
			125			60		
			160			80		
C3200-4.5-1 - 80	4.5	1	80	5	10	40		
			100			50		
			125			60		
			160			80		
		1.2	80			40		
			100			50		
			125			60		
			160			80		
		1.5	100			50		
			125			60		
			160			80		
			200			100		
C3200-5.5-1 - 80	5.5	1	80	6	12	40	5	0.5
			100			50		
			125			60		
			160			80		
		1.2	80			40		
			100			50		
			125			60		
			160			80		
		1.5	100			50		
			125			60		
			160			80		
			200			100		
		2	125			60		
			160			80		
			200			100		

Code	B	H	L	D	D1	L1	H	R
C3200-7.5 -1.2-100	7.5	1.2	100	8	14	50	5	0.5
			125			60		
			160			80		
			200			100		
		1.5	125			60		
			160			80		
			200			100		
			250			125		
		2	160			80		
			200			100		
			250			125		
			315			160		
C3200-9.5 -1.5-160	9.5	1.5	160	10	16	80		
			200			100		
			250			125		
			315			160		
		2	200			100		
			250			125		
			315			160		
			400			200		
C3200-11.5-2 -200	11.5	2	200	12	18	100	7	0.8
			250			125		
			315			160		
			400			200		
		2.5	200			100		
			250			125		
			315			160		
			400			200		
C3200-15.5-2 -200	15.5	2	200	16	22	100		
			250			125		
			315			160		
			400			200		
		2.5	200			100		
			250			125		
			315			160		
			400			200		

C3201

扁顶针
Flat jector pins
Mat：1.2343
Compability:HASCO Z465

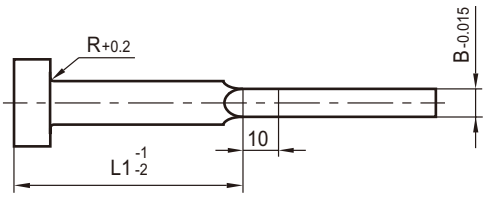

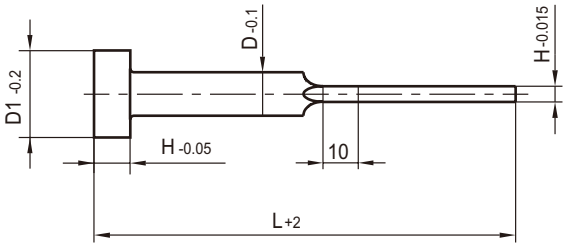

Code	B	H	L	D	D1	L1	H	R
C3201-2.8-0.5- 80	2.8	0.5	80	3	6	40	3	0.3
			100			50		
			125			60		
			160			80		
		0.6	80			40		
			100			50		
			125			60		
			160			80		
		0.8	80			40		
			100			50		
			125			60		
			160			80		
			200			100		
		1	100			50		
			125			60		
			160			80		
			200			100		
C1200-3.8-0.6- 80	3.8	0.6	80	4.2	8	40		
			100			50		
			125			60		
			160			80		
			200			100		
		0.8	63			30		
			80			40		
			100			50		
			125			60		
			160			80		
			200			100		

Code	B	H	L	D	D1	L1	H	R
C3201-3.8-0.8-250	3.8	0.8	250	4.2	8	125	3	0.3
		1	63			30		
			80			40		
			100			50		
			125			60		
			160			80		
			200			100		
			250			125		
		1.2	80			40		
			100			50		
			125			60		
			160			80		
			200			100		
			250			125		
C3201-4.5-1 - 80	4.5	1	80	5	10	40		
			100			50		
			125			60		
			160			80		
			200			100		
			250			125		
		1.2	80			40		
			100			50		
			125			60		
			160			80		
			200			100		
			250			125		
			315			160		
		1.5	100			50		

C3201

扁顶针
Flat jector pins
Mat：1.2343
Compability:HASCO Z465

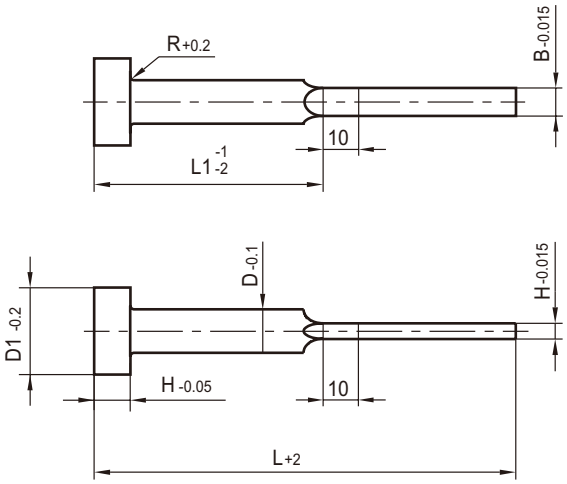

Code	B	H	L	D	D1	L1	H	R
C3201-4.5-1.5-125	4.5	1.5	125	5	10	60	3	0.3
			160			80		
			200			100		
			250			125		
C3201-5.5-1 - 80	5.5	1	80	6	12	40	5	0.5
			100			50		
			125			60		
			160			80		
			200			100		
			250			125		
		1.2	80			40		
			100			50		
			125			60		
			160			80		
			200			100		
			250			125		
		1.5	100			50		
			125			60		
			160			80		
			200			100		
			250			125		
			315			160		
		2	100			50		
			125			60		
			160			80		
			200			100		
			250			125		
C1200-5.5-2 -100	7.5	1.2	100	8	14	50		

Code	L	H	B	D	D1	L1	H	R
C3201-7.5-1.2-125	7.5	1.2	125	8	14	60	5	0.5
			160			80		
			200			100		
			250			125		
			315			160		
		1.5	125			60		
			160			80		
			200			100		
			250			125		
			315			160		
		2	160			60		
			200			80		
			250	10	16	100		
C3201-9.5-1.5-160	9.5	1.5	160			80		
			200			100		
			250			125		
		2	200			100		
			250			125		
			315			160		
C1200-9.5-2 -200	11.5		200	12	18	100	7	0.8
			250			125		
			315			160		
		2.5	200			100		
			250			125		
			315			160		

C3600

司筒
Ejector sleeves
Mat：1.2343
Compability:HASCO Z45

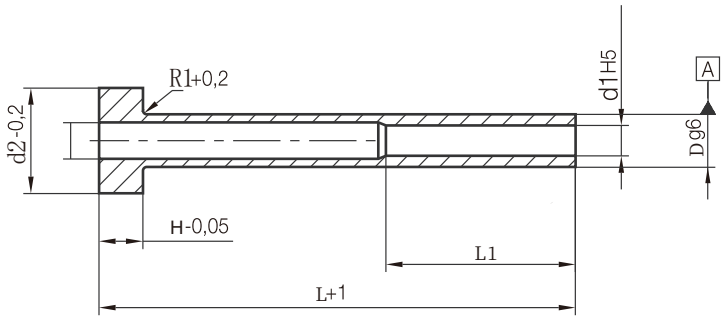

Code	D	L	d1	L1	d2	H
C3600-2 - 50	2	50	1	25	4	2
		75				
		100				
C3600-2.5- 50	2.5	50	1~1.2	25	5	2
		75				
		100				
C3600-3 - 50	3	50	1.3~1.6	35	6	3
		75				
		100				
		125				
		150				
C3600-3.5- 50	3.5	50	1.6~2.2		7	
		75				
		100				
		125				
		150				
C3600-4 - 50	4	50	2~2.5		8	
		75				
		100				
		125				
		150				
		175				
		200				
		225				
C3600-5 - 50	5	50	3~3.5	45	10	
		75				
		100				
		125				
		150				
		175				
		200				
		225				
C3600-5.5- 50	5.5	50	3.5~4			
		75				
		100				
		125				
		150				

Code	D	L	d1	L1	d2	H
C3600-5.5-175	5.5	175	3.5~4	45	10	3
		200				
C3600-6 - 60	6	60	3.5~4.5		12	5
		75				
		100				
		125				
		150				
		175				
		200				
		225				
		250				
		275				
		300				
		325				
C3600-7 - 75	7	75	4.5~5			
		100				
		125				
		150				
		175				
		200				
		225				
		250				
		275				
		300				
C3600-8 - 75	8	75	4.2~5.5		14	
		100				
		125				
		150				
		175				
		200				
		225				
		250				
		275				
		300				
		325				
		350				
		375				

C3600

司筒

Ejector sleeves

Mat：1.2343

Compability:HASCO Z45

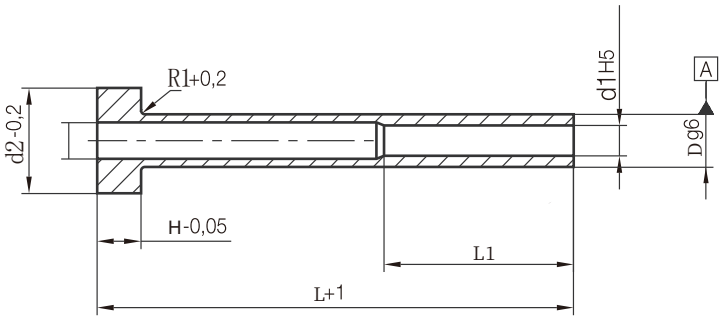

Code	D	L	d1	L1	d2	H
C3600-8 -400	8	400	3.5~6	100	14	5
C3600-9 -125	9	125	4.5~7	45		
		150				
		175				
		200				
		225				
C3600-10 -125	10	125	6~7		16	
		150				
		175				
		200				
		225				
		250				
		275				
		300				
		325				
		350				
		375				
		400		100		
C3600-11 -100	11	100	4.5~9	45	18	
		150				
		200				
		250				
		300				
		350				
		400		100		
C3600-12 -125	12	125	8~9	45	20	7
		150				
		175				
		200				
		225				
		250				
		275				
		300				
		325				
		350				
		375				
		400		100		

Code	D	L	d1	L1	d2	H
C3600-14 - 75	14	75	10~12	45	22	7
		100				
		125				
		150				
		175				
		200				
		225				
		250				
		275				
		300				
		325				
		350				
		375				
		400		100		
C3600-16 - 75	16	75	10~13	45		
		100				
		125				
		150				
		175				
		200				
		225				
		250				
		275				
C3600-20 -100	20	100	12~16	100	26	
		125		45		
		150				
		175				
		200				
		225				
		250				
C3600-25 -100	25	100	14~16	100	32	10
		125		45		
		150				
		175				
		200				
		225				
		250				

TMC®
TOOMOCO

4

General mould components

C4000 4.02
日期章
Date stamps
HASCO Z48

C4010 4.03
日期章
Date stamps
HASCO 4861

C4020 4.04
日期章
Date stamps
HASCO Z4800

C4400 4.07
限位开关
Limit switch
STRACK Z7600

C4500 4.08
气顶
Air valves
HASCO Z491

C4502 4.10
气顶
Air valves
DME VA

C4503 4.11
气顶
Air valves
CUMSA VA

C4810 4.13
等高螺丝
Shoudler bolt screws
HASCO Z38

C4000

日期章

Date stamps

Mat：1.2083 / 50-55HRC

Compability: HASCO Z48

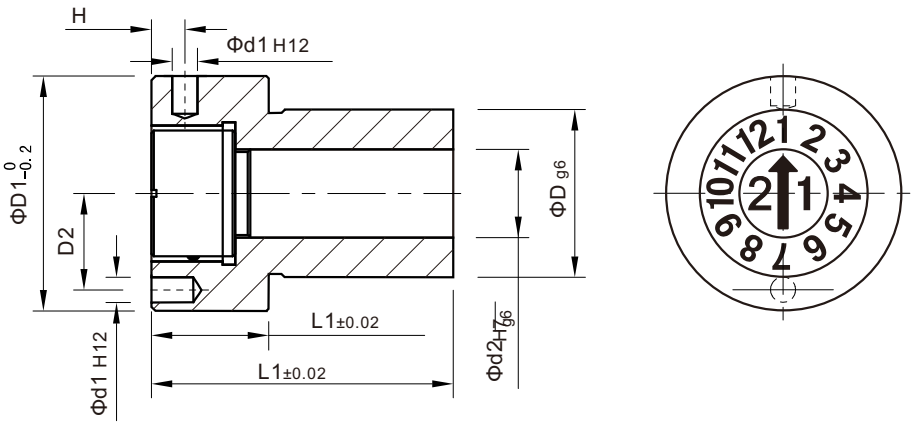

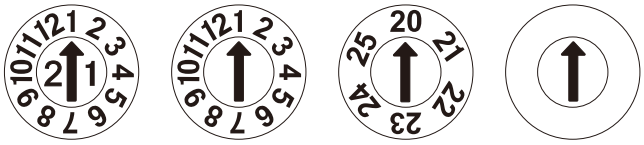

C4000-1 C4000-2 C4000-3 C4000-4

Code	Code	Code	**D**	D1	L	L1	H	D2	d1	d2
C4000-1- 6	C4000-2- 6	C4000-3- 6	**6**	10	14	5	0.9	5	1.5	3.5
C4000-1- 8	C4000-2- 8	C4000-3- 8	**8**	12	17	6		6		4.5
C4000-1-12	C4000-2-12	C4000-3-12	**12**	20	22	10	3.5	8	2	6.5
C4000-1-16	C4000-2-16	C4000-3-16	**16**	23	27	11		9.25		9
C4000-1-20	C4000-2-20	C4000-3-20	**20**	28	36	14	4	11.5	3	10.5

C4010

日期章

Date stamps

Mat：1.2083 / 50-55HRC

Compability: HASCO 4861

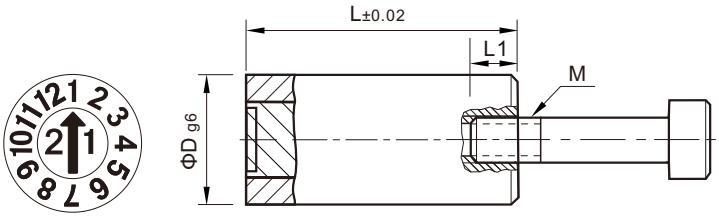

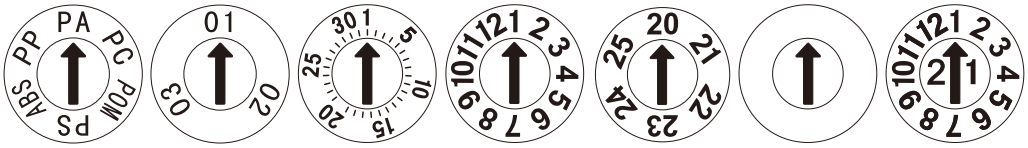

C4010-1 C4010-2 C4010-3 C4010-4 C4010-5 C4010-6 C4010-7

Code	Code	Code	Code	Code	D	L	L1	M
C4010-1- 4	C4010-2- 4	C4010-3- 4	C4010-4- 4	C4010-5- 4	**4**	12.5	2.5	M2× 20
C4010-1- 5	C4010-2- 5	C4010-3- 5	C4010-4- 5	C4010-5- 5	**5**	14	3.0	M2.5×20
C4010-1- 6	C4010-2- 6	C4010-3- 6	C4010-4- 6	C4010-5- 6	**6**	16		M3×20
C4010-1- 8	C4010-2- 8	C4010-3- 8	C4010-4- 8	C4010-5- 8	**8**	18		
C4010-1-10	C4010-2-10	C4010-3-10	C4010-4-10	C4010-5-10	**10**	22	5.5	
C4010-1-12	C4010-2-12	C4010-3-12	C4010-4-12	C4010-5-12	**12**	25		M4×20

C4020

日期章
Date stamps
Mat：1.2083 / 50-55HRC
Compability: HASCO Z4800

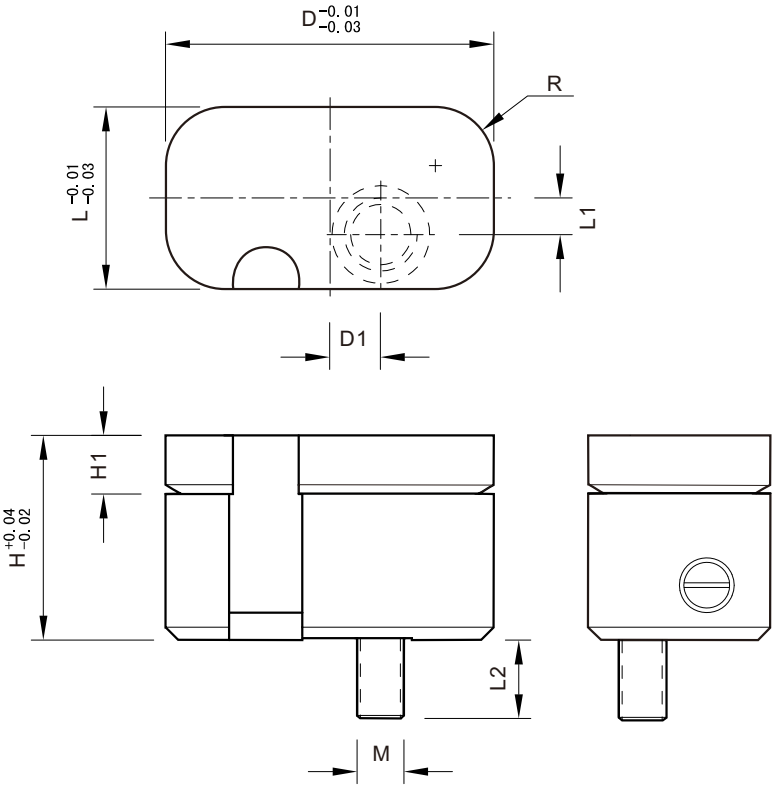

Code	D	L	D1	L1	L2	H	H1	R	M
C4020-18-10	**18**	**10**	2.5	2	5	11.2	3.2	3.2	M3
C4020-25-20	**25**	**20**	4.5	4	4	12.7		3.5	
C4020-35-25	**35**	**25**	8	6.5					

C4400

限位开关
Limit switch
Compability: STRACK Z7600

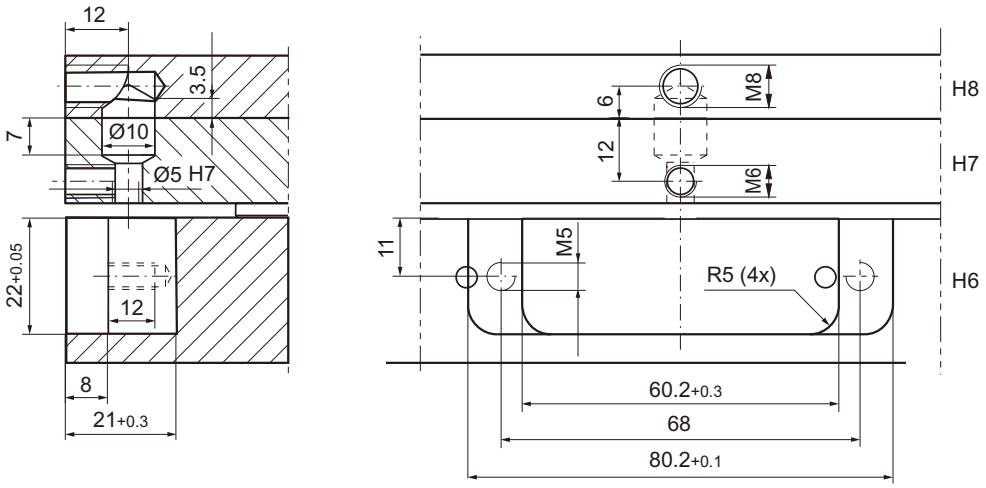

Code	M	Max
C4400-1	-	48V.2A
C4400-2	M5x16	80℃/24V.2A

C4500

气顶
Air valves
Max：250℃
Compability: HASCO Z491

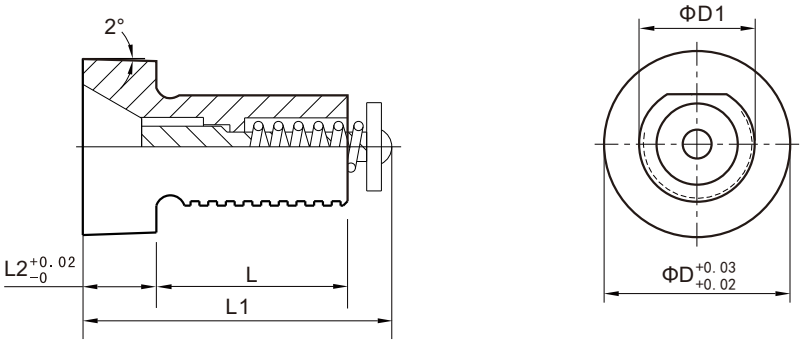

4

Code	D	D1	L	L1	L2
C4500- 8	**8**	6	8	16	5
C4500-12	**12**	8	13	21	
C4500-16	**16**	10	12	22	6

C4503

气顶

Air valves

Mat：1.2083 / 50-55HRC

Max：150°

Compability: CUMSA VA

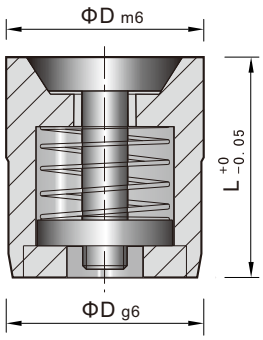

Code	D	L
C4503-065212	**6**	12
C4503-086512	**8**	
C4503-100812	**10**	
C4503-121012	**12**	
C4503-161320	**16**	20
C4503-201720	**20**	

C4810

等高螺丝

Shoudler bolt screws

Mat：SCM435 / 33-38HRC

Compability: HASCO Z38

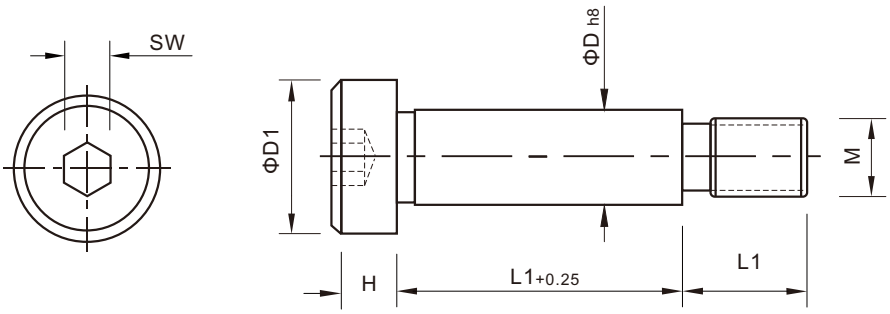

Code	D1	L1	D2	D3	L2	K1	SW1
C4810- 6- 8	6	8	M5	10	9.5	4.5	3
		10					
		12					
		16					
		20					
		25					
		30					
		40					
		50					
		60					
C4810- 8- 8	8	8	M6	13	11	5.5	4
		10					
		12					
		16					
		20					
		25					
		30					
		40					
		50					
		60					
		70					
		80					
C4810-10-10	10	10	M8	16	13	7	5
		12					
		16					
		20					
		25					
		30					
		40					
		50					
		60					
		70					
		80					
		90					
		100					
C4810-12-12	12	12	M10	18	16	9	6
		16					
		20					

Code	D1	L1	D2	D3	L2	K1	SW1
C4810-12-25	12	25	M10	18	16	9	6
		30					
		40					
		50					
		60					
		70					
		80					
		90					
		100					
C4810-16-20	16	20	M12	24	18	11	8
		25					
		30					
		40					
		50					
		60					
		70					
		80					
		90					
		100					
		120					
C4810-20-30	20	30	M16	30	22	14	10
		35					
		40					
		50					
		60					
		70					
		80					
		90					
		100					
		120					
		140					
C4810-24-50	24	50	M20	36	27	16	12
		60					
		70					
		80					
		90					
		100					
		120					

4

TMC®
TOOMOCO

5

Demoulding series

C5120 5.07
安全扣
Tool safety devices
HASCO Z73

C5200 5.08
限位夹
Slide retainers
STRACK Z5130

C5201 5.09
限位夹
Slide retainers
STRACK Z5134

C5210 5.10
限位夹
Slide retainers
STRACK Z5140

C5220 5.11
限位夹
Slide retainers
HASCO Z189

C5221 5.12
限位夹
Slide retainers
MEUSBURGER E3044

C5225 5.13
限位夹
Slide retainers
CUMAS RC

C5226 5.13
限位夹
Slide retainers
CUMAS RM

C5300 5.19
锁模扣
Latch locks
HASCO Z170

C5301 5.20
锁模扣
Latch locks
HASCO Z170

C5310 5.21
锁模扣
Latch locks
HASCO Z171

C5311 5.22
锁模扣
Latch locks
HASCO Z171

C5315 5.23
锁模扣
Latch locks
CUMAS GS

C5320 5.24
锁模扣
Latch locks
HASCO Z174

C5321 5.25
锁模扣
Latch locks
HASCO Z174

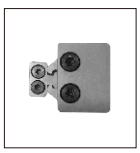

C5325 5.26
锁模扣
Round locating unitsaa
MEUSBURGER E1809

C5326 5.27
锁模扣
Latch locks
MEUSBURGER E1808

C5327 5.28
锁模扣
Latch locks Links
MEUSBURGER E1820

C5330 5.29
锁模扣
Latch locks Links
STRACK Z4

C5335 5.35
锁模扣
Latch locks Links
STRACK Z5

C5338 5.36
锁模扣
Latch locks Links
RABOURDIN REF

C5410 5.51
锁模扣
Latch locks Links
STRACK Z3

C5420 5.54
锁模扣
Latch locks Links
HASCO Z173

C5430 5.55
锁模扣
Latch locks Links
MEUSBURGER E1840

C5500 5.56
加速顶出
Accelerated ejectors
CUMAS EP

C5510 5.57
早回机构
Early return mechanism
CUMAS AE

C5520 5.59
加速顶出
Accelerated ejectors
STRACK Z141

C5550 5.60
侧抽芯
Slide units
HASCO Z181

C5551 5.61
侧抽芯
Slide units
HASCO Z1810

C5552 5.62
侧抽芯
Slide units
HASCO Z1811

C5553 5.63
侧抽芯
Slide units
HASCO Z1812

C5554 5.64
侧抽芯
Slide units
HASCO Z1813

C5600 5.65
侧抽芯
Slide units
STRACK Z4290

C5780 5.76
斜导柱固定座
Angle pin housing
CUMAS BG

C5781 5.77
斜导柱固定座
Angle pin housing
CUMAS GR

C5800 5.85
二次顶出
Two-stage ejectors
HASCO Z169

C5810 5.86
二次顶出
Two-stage ejectors
HASCO Z1691

C5825 5.87
二次顶出
Two-stage ejectors
MEUSBURGER E1860

C5830 5.88
二次顶出
Two-stage ejectors
CUMAS DX

C5840 5.89
二次顶出
Two-stage ejectors
HASCO Z163

C5841 5.89
复位机构
Round latch locks
HASCO Z164

C5860 5.92
螺纹限位机构
Two-stage ejectors
CUMAS LR

C5861 5.92
螺纹限位机构
Two-stage ejectors
CUMAS AL

C5880 5.93
来复线杆
Helical spindle
HASCO Z1500

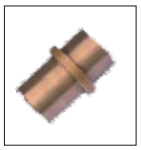

C5881 5.95
来复线套
Helical spindle
HASCO Z1520

C5900 5.97
弹弓顶
Sprung cores
CUMAS PW

C5901 5.98
弹弓顶
Sprung cores
CUMAS PF

C5902 5.99
弹弓顶
Sprung cores
CUMAS MP

C5910 **5.100**

弹弓顶

Sprung cores

MEUSBURGER E3200

C5911 **5.101**

两瓣弹弓顶

Sprung cores

MEUSBURGER E3202

C5920 **5.102**

四瓣弹弓顶

Sprung cores

CUMAS EE

C5120

安全扣
Tool safety devices
Mat：1.2312
Compability: HASCO Z73

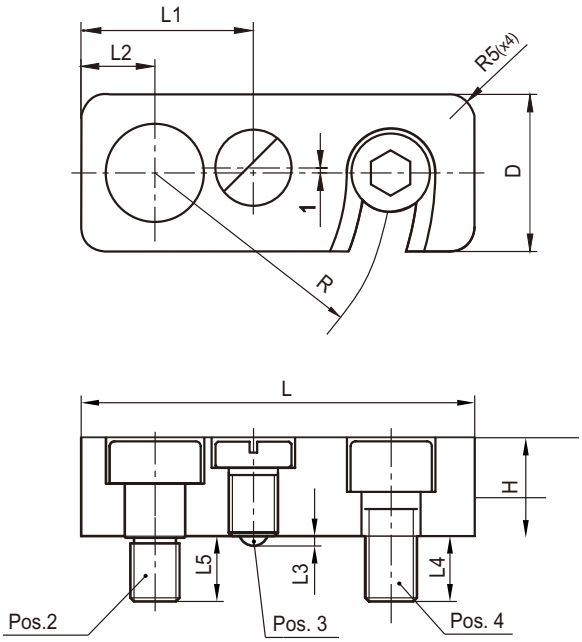

Code	H	D	L	L1	L2	L3	L4	L5	R	Pos.2	Pos.3	Pos.4
C5120-12-20-50	**12**	**20**	**50**	24	10	0.9	8	9	30	M6x 6	M5x 12	M6x 14
C5120-16-25-63	**16**	**25**	**63**	30	13	1.5	11	11	38	M8x 10	M8x 26	M8x 18
C5120-20-32-80	**20**	**32**	**80**	35	15	2	13	13	48	M10x12	M10x20	M10x22

C5200

限位夹
Slide retainers
Mat：1.2344 / 52-54HRC
Max：100℃
Compability: STRACK Z5130

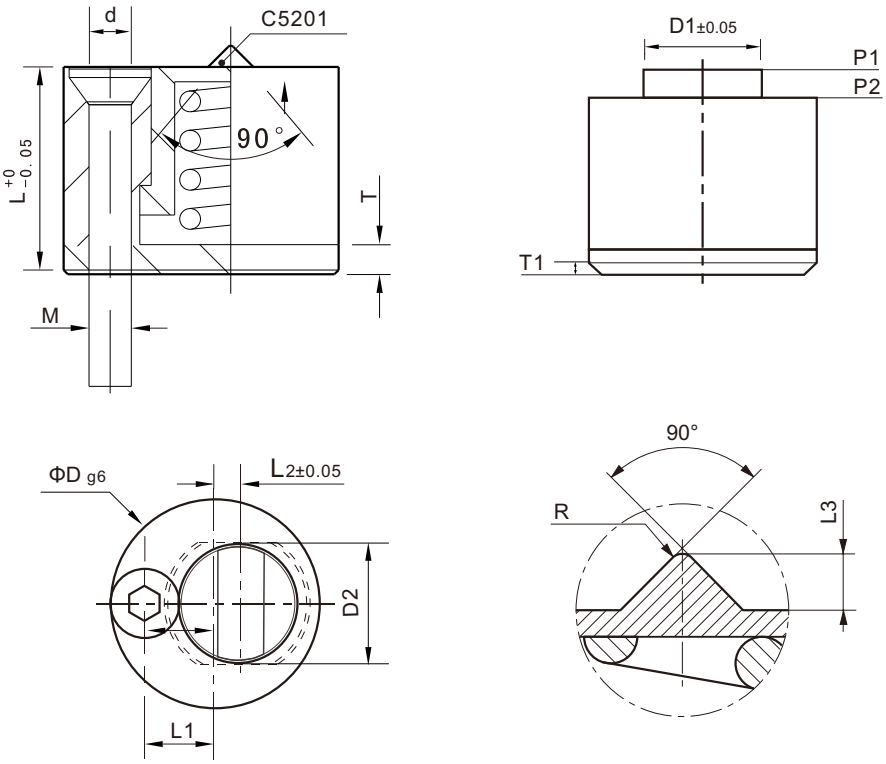

Code	D	D1	D2	L	L1	L2	L3	T	T1	d	R	M	P1(N)	P2(N)
C5200-13	**13**	6.6	7	10	4.3	1.4	1	1.6	0.35	2.2	0.35	M2x16	28	34
C5200-18	**18**	9.6	10	14	6	2	1.8	2	0.5	3.2	0.5	M3x20	38	42
C5200-27	**27**	14.4	15	21	9	3	2.8	3		4.3	0.75	M4x25		92

C5201

限位夹
Slide retainers
Mat：1.2344 / 52-54HRC
Max：100℃
Compability: STRACK Z5134

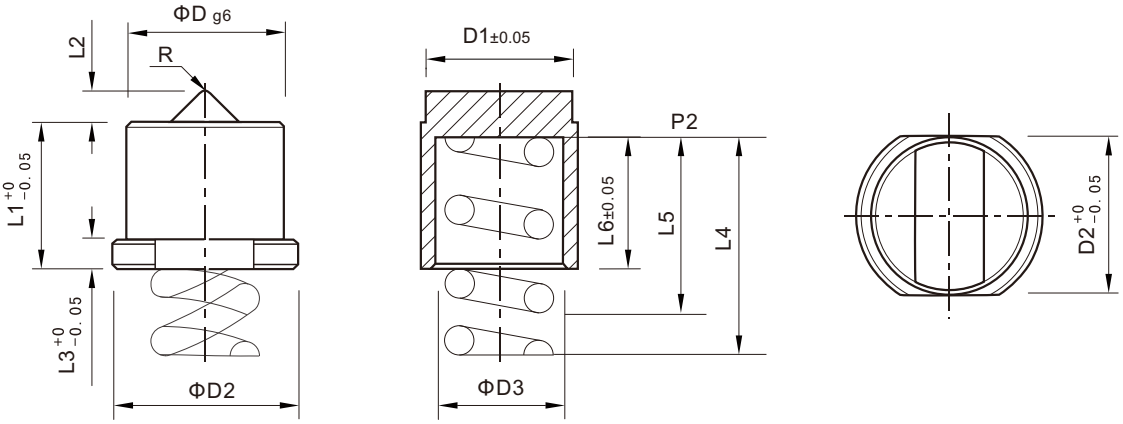

Code	D	D1	D2	D3	L1	L2	L3	L4	L5	L6	R	P2(N)
C5201- 7	**7**	6.6	8.4	5.3	7	1	1.4	12	7.5	6.3	0.35	34
C5201-10	**10**	9.6	12	8.3	10	1.8	2	16	10	9	0.50	42
C5201-15	**15**	14.4	18	12.4	15	2.8	3	18	16	13.5	0.75	92

C5210

限位夹
Slide retainers
Mat：1.2343 / 52-54HRC
Max：100℃
Compability: STRACK Z5140

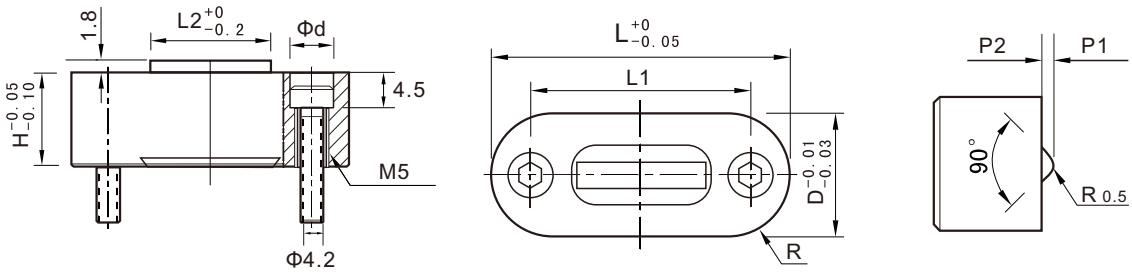

Code	D	H	L	L1	L2	R	d	M	P1(N)	P2(N)
C5210-0	14	12	38	28	16.5	6	8	M4-16	62	70
C5210-1	18	14	53	43	32	8		M4-25	114	126

C5210

限位夹
Slide retainers
Mat：1.2343 / 52-54HRC
Max：100℃
Compability: STRACK Z5140

5

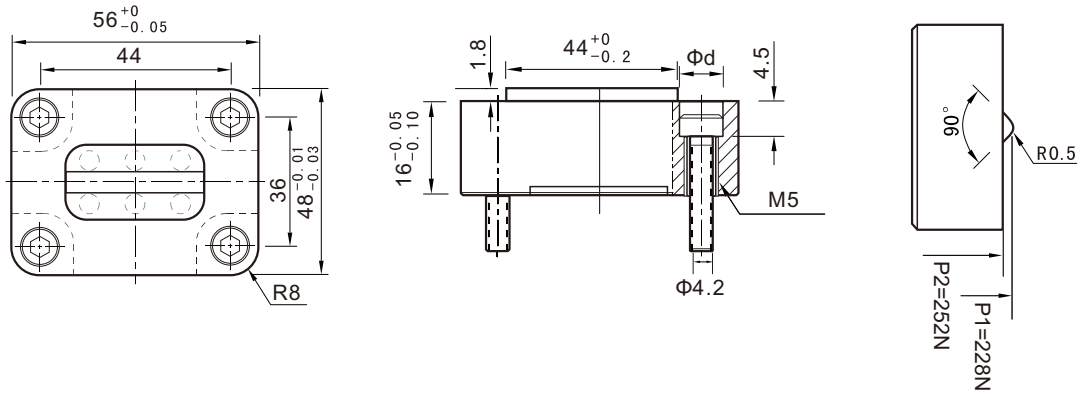

Code	M	P1(N)	P2(N)
C5210-2	M4-25	228	252

C5220

限位夹
Slide retainers
Mat：1.2379 / 58-62HRC
Max：100℃
Compability: HASCO Z189

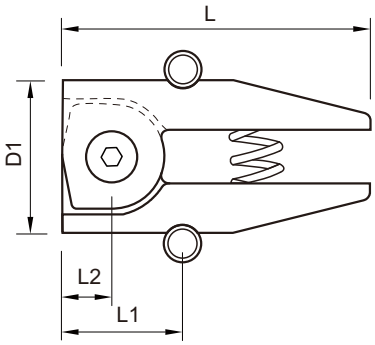

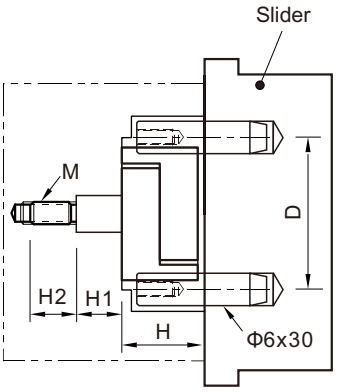

Code	H	D	D1	H1	H2	L	L1	L2	M	F(N)
C5220-10	**10**	21.5	18	5.1	9.5	40	17.5	7	M5	100
C5220-12	**12**	25.5	22	6.1	11	43	18	7.5	M6	150
C5220-16	**16**	31.5	28	3.1		50	20.5	9.5		250

C5221

限位夹
Slide retainers
Mat：1.2842 / 58-60HRC
Max：180℃
Compability: MEUSBURGER E3044

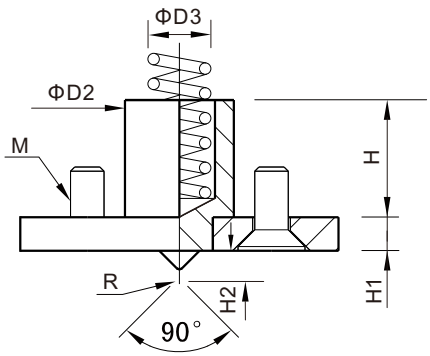

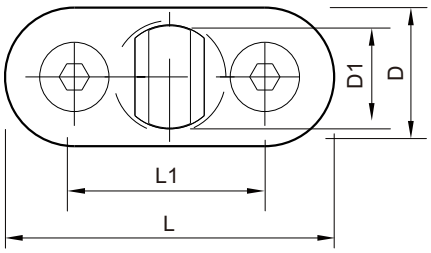

5

Code	**D1**	D	D2	D3	H	H1	H2	L	L1	R	M	F(N)
C5221- 8	**8**	12	9	5	11	3	1.2	30	18	0.35	M4	28
C5221-12	**12**	16	13	8	14	4	2.2	38	22	0.5		38
C5221-16	**16**	20	18	12	22	5	3.2	50	30	0.8	M5	44

C5225

限位夹
Slide retainers
Mat：1.2344 / 40-45HRC
Compability: CUMAS RC

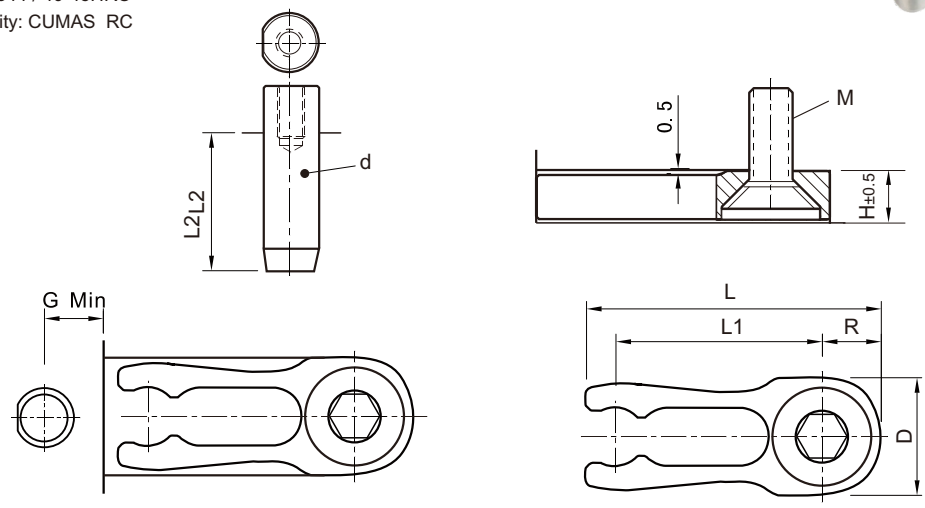

Code	D	L	R	H	L1	L2	L3	d	M	F(N)
C5225-123006	12	30	6	4.7	21	16	4	6×20	M5× 16	49
C5225-164008	16	40	8	5.7	28	15	5	8×20	M6× 20	69
C5225-205010	20	50	10	7.7	34	17	6	10×24	M8× 25	137
C5225-246012	24	60	12	9.7	42	23	7	12×32	M10×30	206
C5225-328012	32	80		11.7	56	27	9	16X40	M12×35	274
C5225-328016			16	15.7		25			M12×50	372

C5226

限位夹
Slide retainers
Mat：1.2344 / 40-45 HRC
Compability:CUMAS RM

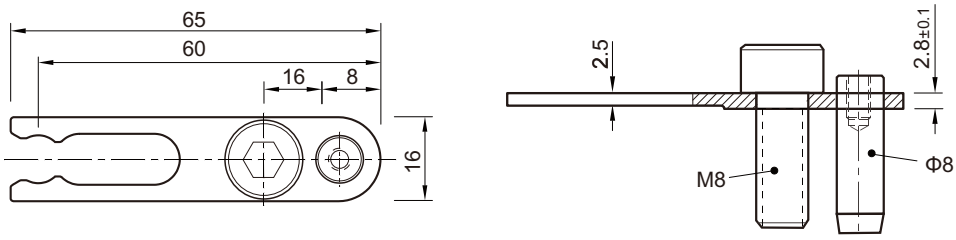

Code	F(N)			
	W1	W2	W3	W4
C5226-651608	74	147	220	294

C5300

锁模扣
Latch locks
Mat:1.2379
Compability: HASCO Z170

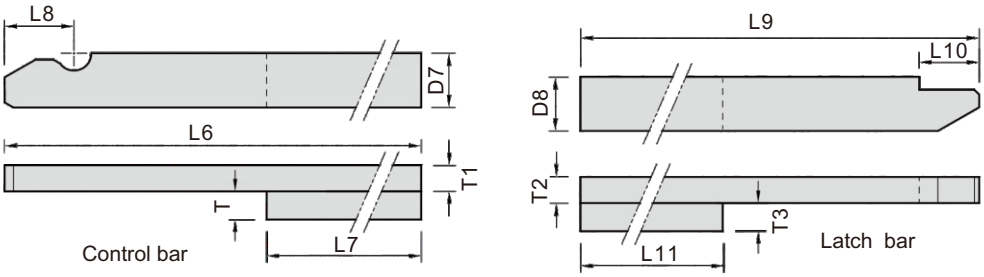

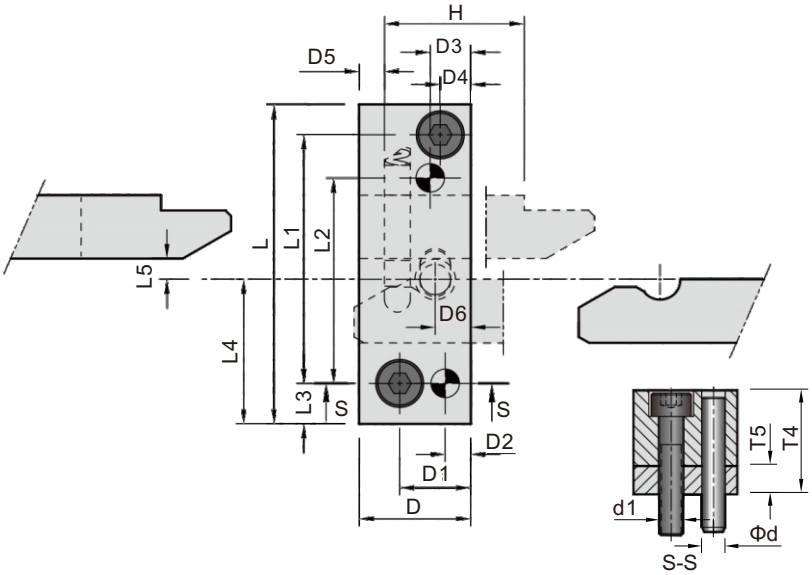

Code	D	D1	D2	D3	D4	D5	D6	D7	D8	L	L1	L2	L3	L4	L5	L6
C5300-1	22	14	5	8	6	5	7	12.5	12.5	63	49	40.5	8	28.5	4	100
C5300-2	34	24	8	18	8		16	20	16	90	69	62	13	45	6	140
C5300-3	42	31	9	22	9	7	20	25	20	110	80	80	15	55	7	200

L7	L8	L9	L10	L11	T	T1	T2	T3	T4	T5	H(min.)	H(max.)	F(N)	Φd	d1
63	16	125	13.8	80	6.5	6	6	6.5	22	6	5.5	80	7800	Φ5x28	M5x25
100	22.5	160	17.7	125	8	12.5	12.5	8	32.5	7.5	9.5	110	13700	Φ6x50	M6x40
	25	250	17.6		12.5	16	16	12.5	44	12	10.5	190	23500	Φ8x60	M8x45

C5301

锁模扣

Latch locks

Mat:1.2379 / DLC

Compability: HASCO Z170

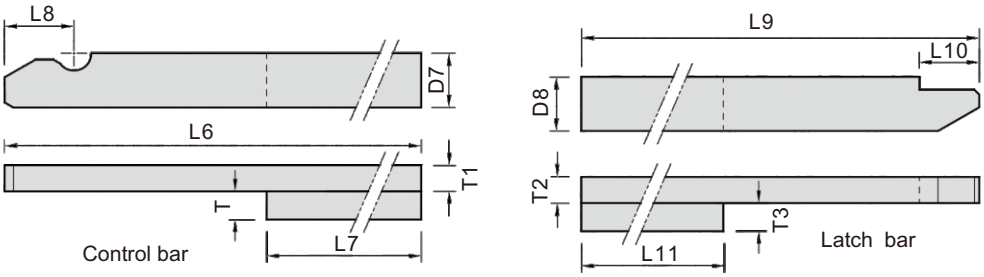

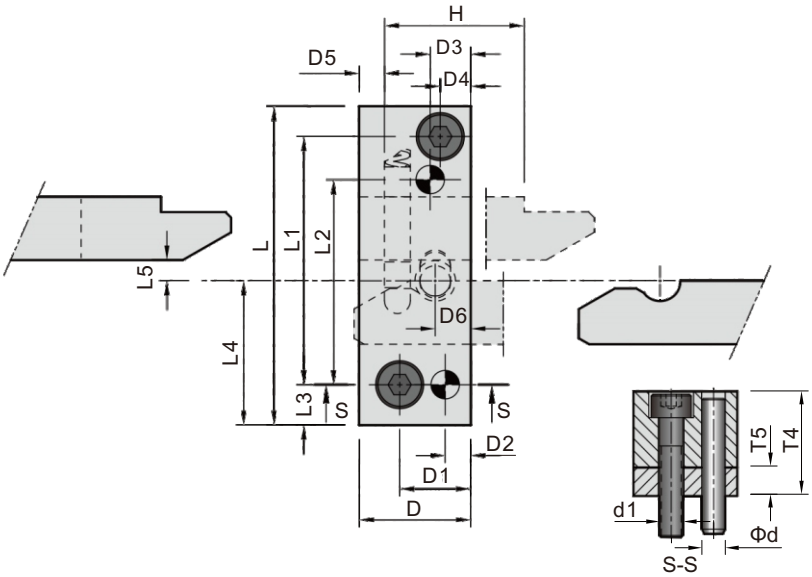

Code	D	D1	D2	D3	D4	D5	D6	D7	D8	L	L1	L2	L3	L4	L5	L6
C5301-1	22	14	5	8	6	5	7	12.5	12.5	63	49	40.5	8	28.5	4	100
C5301-2	34	24	8	18	8		16	20	16	90	69	62	13	45	6	140
C5301-3	42	31	9	22	9	7	20	25	20	110	80	80	15	55	7	200

L7	L8	L9	L10	L11	T	T1	T2	T3	T4	T5	H(min.)	H(max.)	F(N)	Φd	d1
63	16	125	13.8	80	6.5	6	6	6.5	22	6	5.5	80	7800	Φ5x28	M5x25
100	22.5	160	17.7	125	8	12.5	12.5	8	32.5	7.5	9.5	110	13700	Φ6x50	M6x40
	25	250	17.6		12.5	16	16	12.5	44	12	10.5	190	23500	Φ8x60	M8x45

C5310

锁模扣

Latch locks

Mat:1.2379

Compability: HASCO Z171

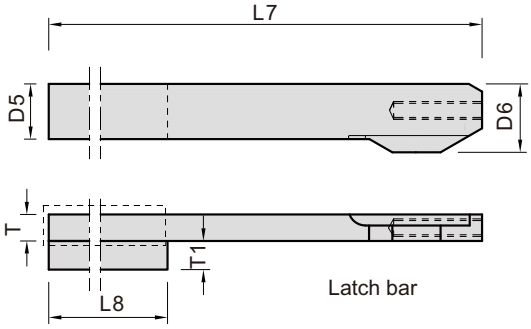

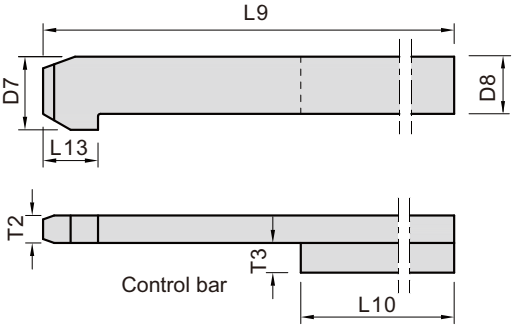

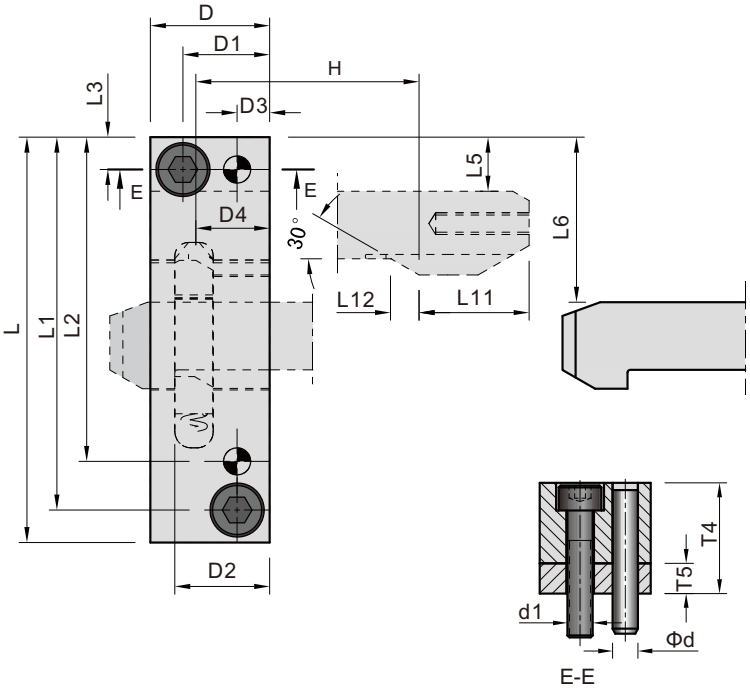

Code	D	D1	D2	D3	D4	D5	D6	D7	D8	L	L1	L2	L3	L5	L6	L7	L8
C5310-1	22	16	17.5	6	13.5	12.5	15.5	16	12.5	75	69	60	6	10	30.5	140	63
C5310-2	31.5	24	25	8	19	16	20	20.5	16	90	83	73	7	12	38	180	100
C5310-3	40	30	32	10	25	20	25	25.5	20	112	103	88	9	16	48	250	125

L9	L10	L11	L12	L13	T	T1	T2	T3	T4	T5	H(min.)	H(max.)	F(N)	Φd	d1
140	63	20	5.2	12	6	6.5	6	6.5	22	6	5.5	80	6500	Φ5x28	M5x25
180	100	27	6.95	16	12.5	8	12.5	8	32.5	7.5	7	110	15500	Φ6x50	M6x35
250	125	36	8.7	20	16	12.5	16	12.5	43.5	12	9	160	22000	Φ8x50	M8x45

C5311

锁模扣

Latch locks

Mat:1.2379 / DLC

Compability: HASCO Z171

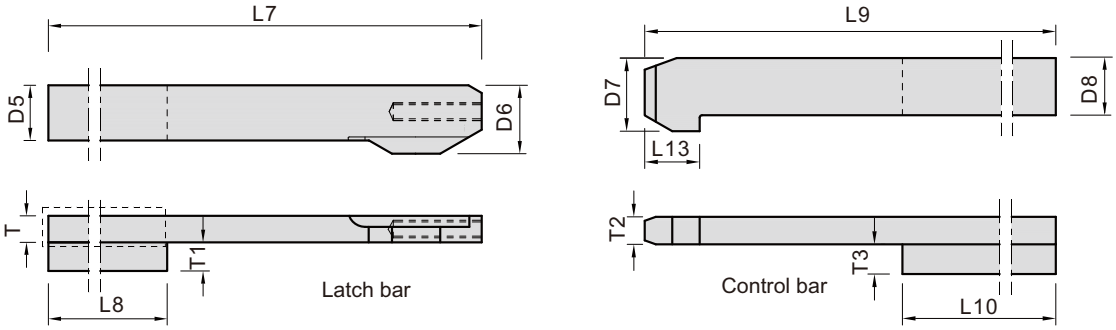

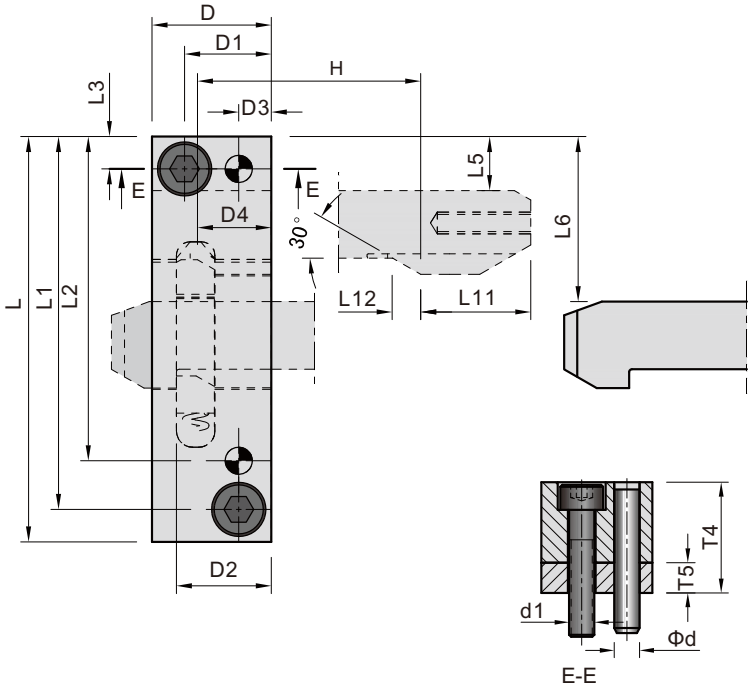

Code	D	D1	D2	D3	D4	D5	D6	D7	D8	L	L1	L2	L3	L5	L6	L7	L8
C5311-1	22	16	17.5	6	13.5	12.5	15.5	16	12.5	75	69	60	6	10	30.5	140	63
C5311-2	31.5	24	25	8	19	16	20	20.5	16	90	83	73	7	12	38	180	100
C5311-3	40	30	32	10	25	20	25	25.5	20	112	103	88	9	16	48	250	125

L9	L10	L11	L12	L13	T	T1	T2	T3	T4	T5	H(min.)	H(max.)	F(N)	Φd	d1
140	63	20	5.2	12	6	6.5	6	6.5	22	6	5.5	80	6500	Φ5x28	M5x25
180	100	27	6.95	16	12.5	8	12.5	8	32.5	7.5	7	110	15500	Φ6x50	M6x35
250	125	36	8.7	20	16	12.5	16	12.5	43.5	12	9	160	22000	Φ8x50	M8x45

C5315

锁模扣

Latch locks

Mat:1.2379

Compability: CUMAS GS

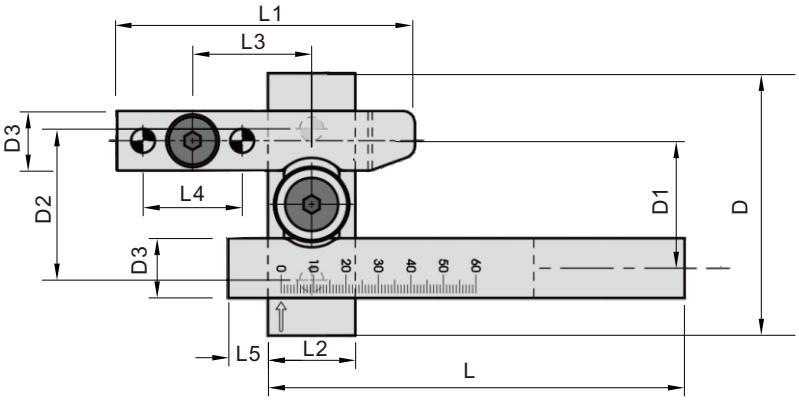

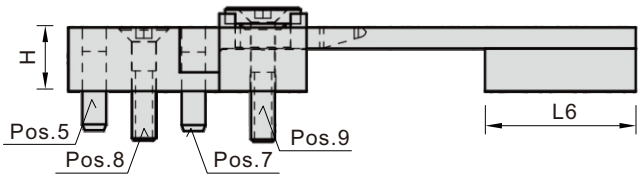

5

Code	L2	D	H	D1	D2	D3	L	L1	L3	L4	L5	L6	Pos				F(N)
													Pos.5	Pos.7	Pos.8	Pos.9	
C5315-226616	**22**	**66**	**16**	32	38	15	105	75	30	25	10	38	Ø6× 20	Ø6× 30	M6× 30	M6× 35	1960
C5315-368619	**36**	**86**	**19**	42.7	46	20	153	102	43	32	12	50	Ø8× 24	Ø8× 36	M8× 36	M8× 40	3920
C5315-421024	**42**	**106**	**24**	50.2	56	24.5	190	124	51	40	15	60	Ø10×30	Ø10×40	M10×40	M10×45	7840

C5320

锁模扣

Latch locks

Mat:1.2738

Compability: HASCO Z174

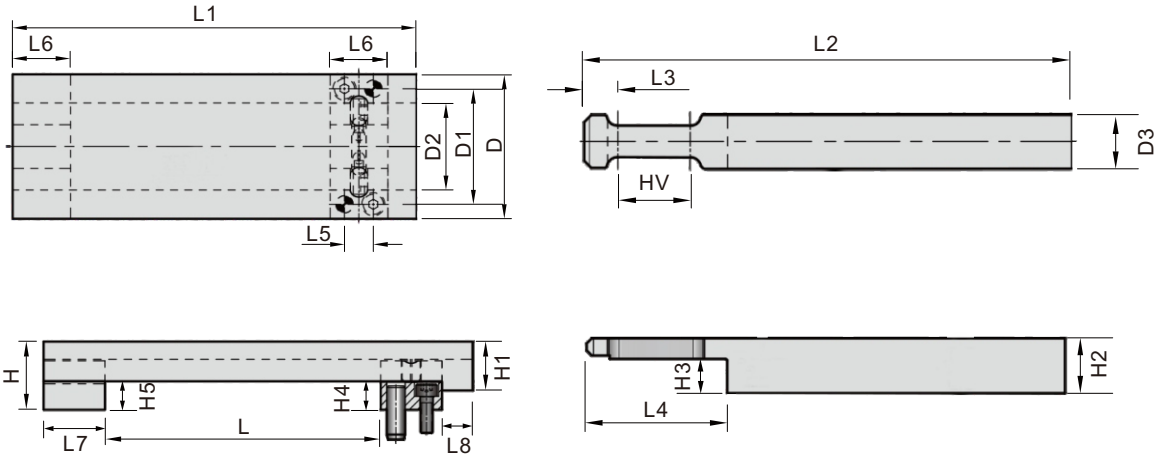

Code	D	L		HV	D1	D2	D3	H	H1	H2	H3	H4	H5	L1	L2	L3	L4	L5	L6	L7	L8	F(N)	Dowel pin	M
		max.	max.																					
C5320-50-90- 0	50	90	4	0	40	30.05	15	22.3	16	16	10	9	9.3	140	140	9.75	20	10	20	20	10	16000	Φ6×20	M4X12
C5320-50-90- 20				20													40							
C5320-50-130- 0		130		0										180	180		20							
C5320-50-130- 50				50													70							
C5320-80-117- 0	80	117	5.5	0	60	40.05	20	30.3	22	21	13	12	12.3	200	200	16.75	34	16	34	34	15	27000		M4X16
C5320-80-117- 32				32													66							
C5320-80-167- 0		167		0										250	250		34							
C5320-80-167- 75				75													109							
C5320-100-145- 0	100	145	7	0	80	60.05	25	37.5	27	27	16	15	15.5			22.25	45	22	45	45		48000	Φ8×24	M8X18
C5320-100-145-50				50													95							
C5320-100-195- 0		195		0										300	300		45							
C5320-100-195-80				80													125							

C5321

锁模扣

Latch locks

Mat:1.2379 / DLC

Compability: HASCO Z174

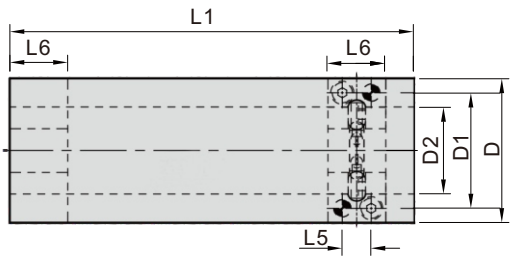

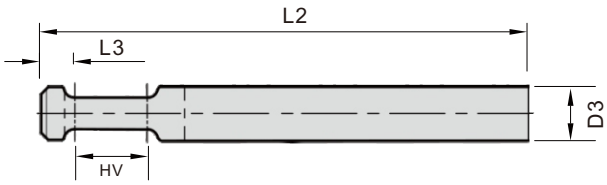

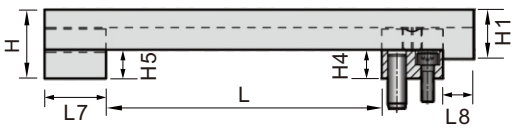

5

Code	D	L max.	L max.	HV	D1	D2	D3	H	H1	H2	H3	H4	H5	L1	L2	L3	L4	L5	L6	L7	L8	F(N)	Dowel pin	M
C5321-50-90- 0	50	90	4	0	40	30.05	15	22.3	16	16	10	9	9.3	140	140	9.75	20	10	20	20	10	16000	Φ6×20	M4X12
C5321-50-90- 20				20													40							
C5321-50-130- 0		130		0										180	180		20							
C5321-50-130- 50				50													70							
C5321-80-117- 0	80	117	5.5	0	60	40.05	20	30.3	22	21	13	12	12.3	200	200	16.75	34	16	34	34	15	27000		M4X16
C5321-80-117- 32				32													66							
C5321-80-167- 0		167		0										250	250		34							
C5321-80-167- 75				75													109							
C5321-100-145- 0	100	145	7	0	80	60.05	25	37.5	27	27	16	15	15.5			22.25	45	22	45	45		48000	Φ8×24	M8X18
C5321-100-145-50				50													95							
C5321-100-195- 0		195		0										300	300		45							
C5321-100-195-80				80													125							

C5325

锁模扣
Latch locks
Mat：1.2085
Compability: MEUSBURGER E1809

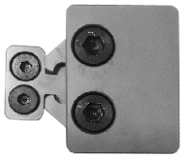

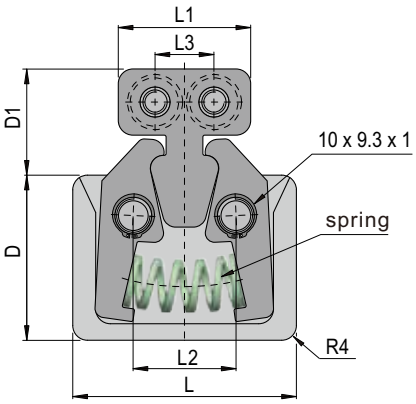

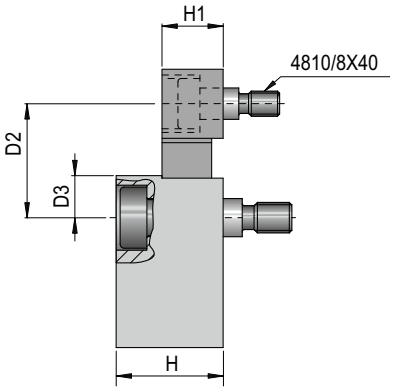

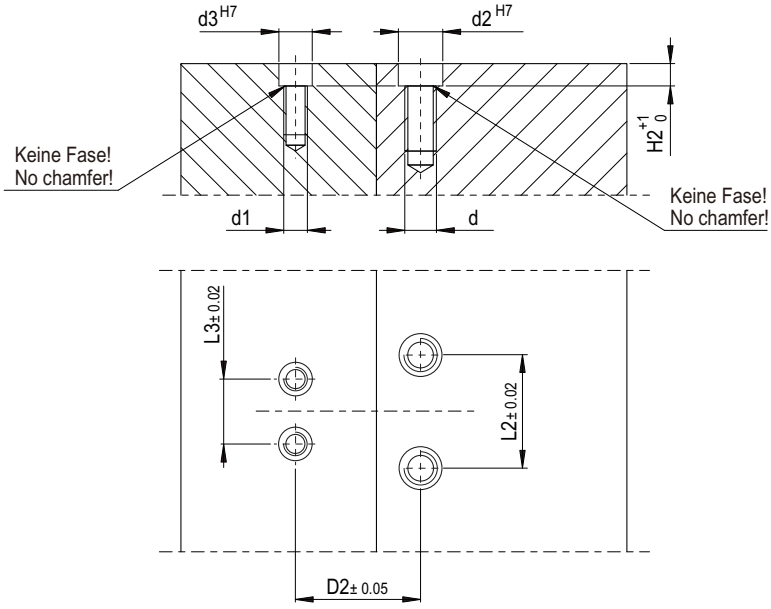

Code	L	D2	F [N]	D	D1	D3	H	H1	H2	L1	L2	L3	d	d1	d2	d3	spring
C5325-62-31- 400	62	31	400	45	29	11	28	14.4	6	36	28	16	M8	M6	10	8	16 x 32
C5325-62-31- 700			700														16 x 32
C5325-62-31-1050			1050														16 x 32

C5326

锁模扣
Latch locks
Mat：1.2344
Max：250°C
Compability: MEUSBURGER E1808

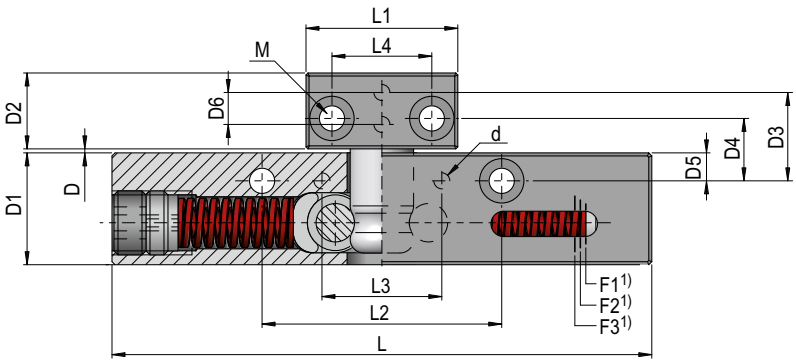

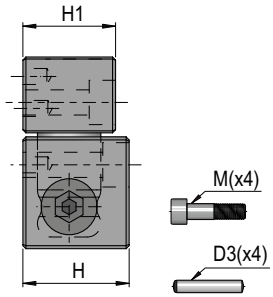

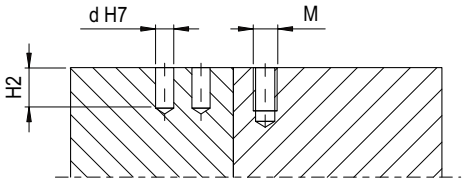

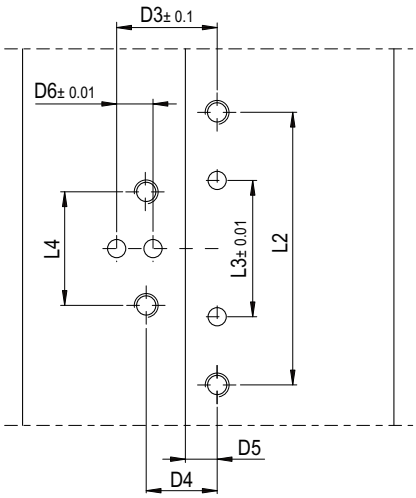

Code	L	D	D1	D2	D3	D4	D5	D6	H	H1	H2	L1	L2	L3	L4	d	M	F1 [N]	F2 [N]	F3 [N]
C5326-135- 1	135	1	28	19	22.1	15.6	7	8	25	25	9	38	60	30	25	Φ5	M 6	450	750	1000
C5326-135-40		40			61.1	54.6														
C5326-140- 2	140	2	32	22	28.1	23.1	10		32		11	64	70	100	35	Φ6	M10		1000	1500
C5326-140-40		38.2			64.3	59.3														

5

C5327

锁模扣
Latch locks
Mat：1.2738
Max：180°C
Compability: MEUSBURGER E1820

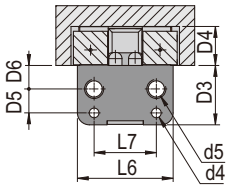

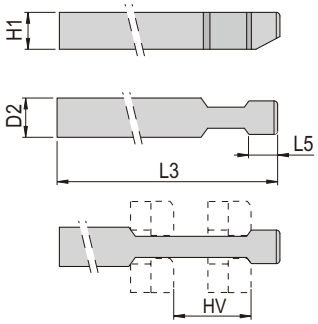

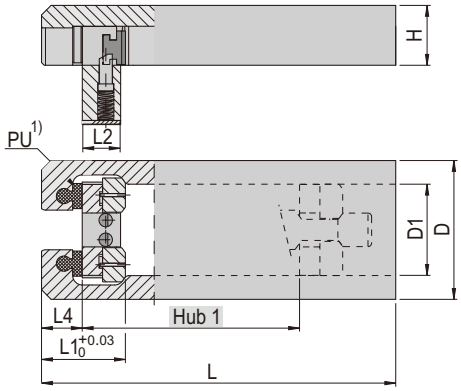

Code	D	L	HV	D1	D2	D3	D4	D5	D6	H	H1	L1	L2	L3	L4	L5	L6	L7	Hub1	d	M
C5327-54-130- 0	54	130	0	32.2	12.4	23	14	10	7	22	12.4	32.6	15	130	15.6	10.5	34	22	4-60	4	M 6
C5327-54-130-15			15											160							
C5327-54-130-25			25																		
C5327-54-160- 0		160	0											130					4-90		
C5327-54-160-15			15											160							
C5327-54-160-25			25																		
C5327-64-146- 0	64	146	0	38.2	16.4	25	16.3		10	25	15.4	35	16	150	17	12	40	26	5-80		M 8
C5327-64-146-18			18											200							
C5327-64-146-32			32																		
C5327-64-198- 0		198	0											150					5-120		
C5327-64-198-18			18											200							
C5327-64-198-32			32																		
C5327-80-198- 0	80		0	49.2	20.4	30	19	12	12	30	16.4	42	20	200	20	14	52	32	6-110	5	M10
C5327-80-198-25			25											250							
C5327-80-198-50			50																		
C5327-80-248- 0		248	0											200					6-160		
C5327-80-248-25			25											250							
C5327-80-248-50			50																		
C5327-94-248- 0	94		0	62.2	25.4	38	24	15	14	36	23	54	27	250	25	16	66	40	7-140	6	M12
C5327-94-248-30			30											300							
C5327-94-248-55			55																		
C5327-94-298- 0		298	0											250					7-190		
C5327-94-298-30			30											300							
C5327-94-298-55			55																		

D (2x)	F(max)	F(max)	Fz 3) max	FV 4) max
54	246	246	20 kN	1.5 kN
64	396	396	35 kN	2.0 kN
80	646	646	50 kN	3.0 kN
94	796	996	80 kN	4.0 kN

C5330

锁模扣

Latch locks

Mat：1.2379 / 900HV

Compability: STRACK Z4

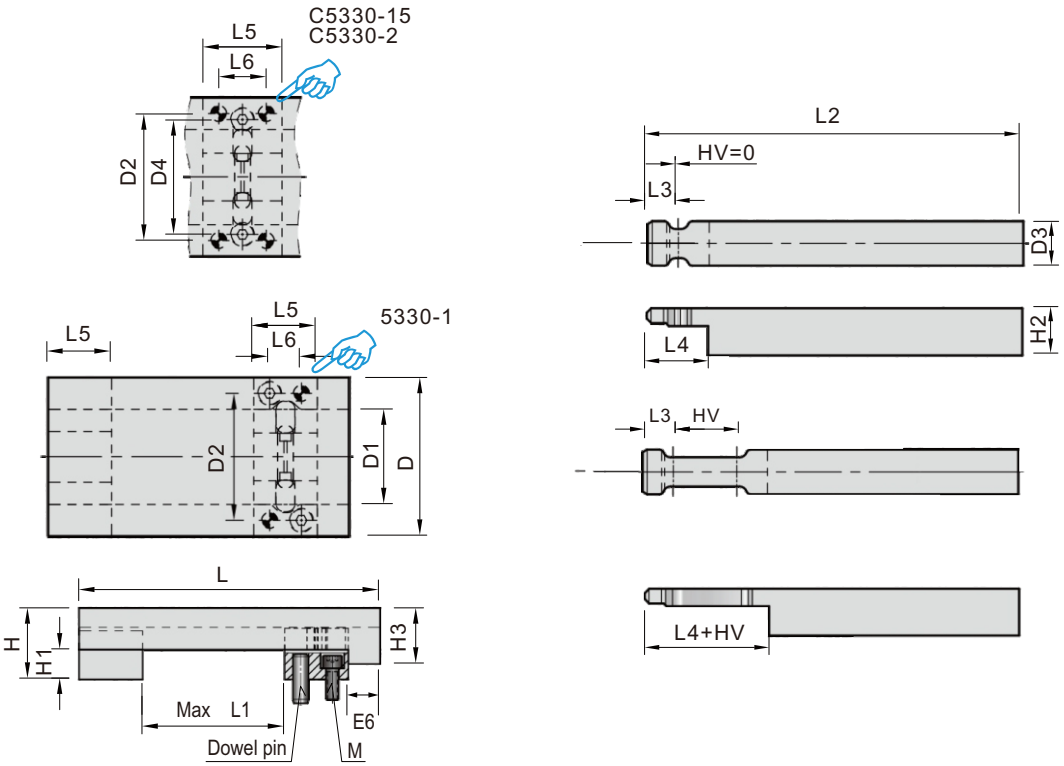

Code	D	HV	D1	D2	D3	D4	D5	H	H1	H2	H3	L	L1	L2	L3	L4	L5	L6	Dowel pin	M
C5330-1 -0 - 0	50	0	30	40	15	-	10	22.3	9.3	16	17.5	146	96	146	10	21	20	10	Ø5×16	M4×12
C5330-1 -25-0		25																		
C5330-1 -50-0		50																		
C5330-1 -75-0		75																		
C5330-15- 0- 0	75	0	45	65	20	56	15	30.3	12.3	21	23.5	196	121	196	15	31	30	20	Ø5x20	M8x16
C5330-15-25-0		25																		
C5330-15-50-0		50																		
C5330-15-75-0		75																		
C5330-2 - 0- 0	90	0	60	74	25	74		37.5	15.5	27	29	246	159	246	18	38	36	25	Ø6x20	M8x20
C5330-2 -25-0		25																		
C5330-2 -50-0		50																		
C5330-2 -75-0		75																		

C5330

锁模扣
Latch locks
Mat：1.2379 / 900HV
Compability: STRACK Z4

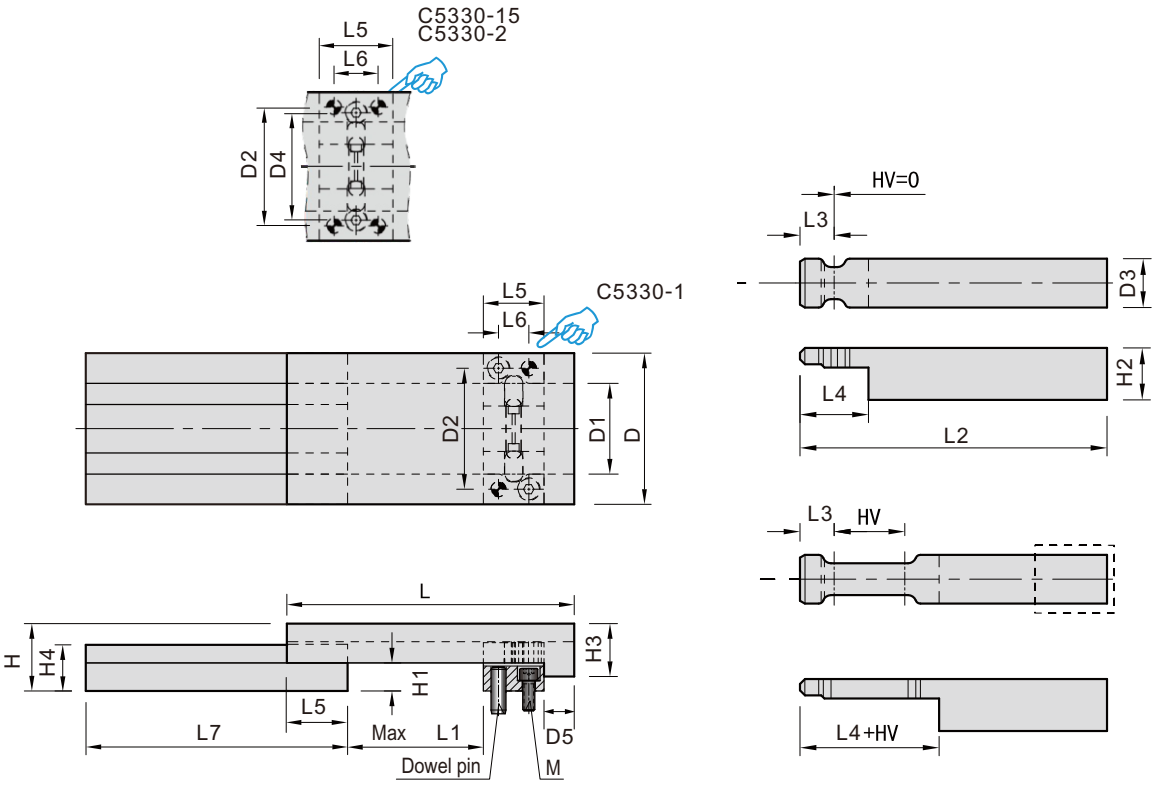

Code	D	HV	D1	D2	D3	D4	D5	H	H1	H2	H3	H4	L	L1	L2	L3	L4	L5	L6	L7	Dowel pin	M
C5330-1 -0 -41	50	0	30	40	15	-	10	22.3	9.3	16	17.5	16	146	96	146	10	21	20	10	146	Ø5×16	M4×12
C5330-1 -25-41		25																				
C5330-1 -50-41		50																				
C5330-1 -75-41		75																				
C5330-15-0 -41	75	0	45	65	20	56	15	30.3	12.3	21	23.5	21	196	121	196	15	31	30	20	196	Ø5x20	M8x16
C5330-15-25-41		25																				
C5330-15-50-41		50																				
C5330-15-75-41		75																				
C5330-2 -0 -41	90	0	60	74	25	74		37.5	15.5	27	29	27	246	159	246	18	38	36	25	246	Ø6x20	M8x20
C5330-2 -25-41		25																				
C5330-2 -50-41		50																				
C5330-2 -75-41		75																				

C5330

锁模扣
Latch locks
Mat：1.2379
Compability: STRACK Z4

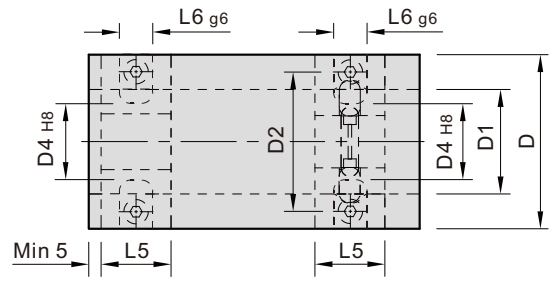

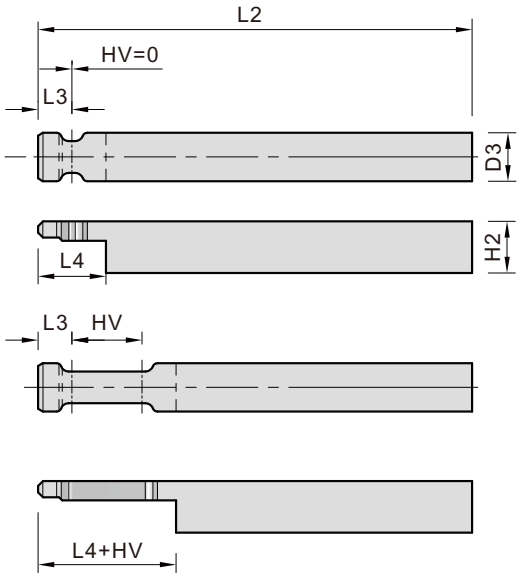

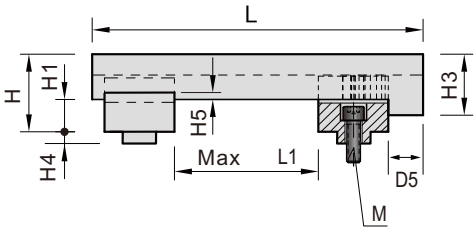

5

Code	D	HV	D1	D2	D3	D4	D5	H	H1	H2	H3	H4	H5	L	L1	L2	L3	L4	L5	L6	M
C5330-11-0 -0	50	0	30	38	15	22	10	22.3	9.3	16	17.5	4	3	146	91	146	10	21	20	10	M6×20
C5330-11-25-0		25																			
C5330-11-50-0		50																			
C5330-11-75-0		75																			
C5330-16-0 -0	75	0	45	56	20	30	15	30.3	12.3	21	23.5	5	4.5	196	116	196	15	31	30	12	M8x25
C5330-16-25-0		25																			
C5330-16-50-0		50																			
C5330-16-75-0		75																			
C5330-21-0 -0	90	0	60	72	25	38		37.5	15.5	27	29	6	6	246	154	246	18	38	36	14	M10x30
C5330-21-25-0		25																			
C5330-21-50-0		50																			
C5330-21-75-0		75																			

C5330

锁模扣
Latch locks
Mat：1.2379
Compability: STRACK Z4

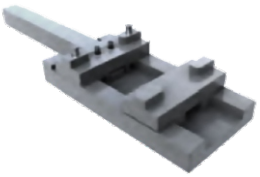

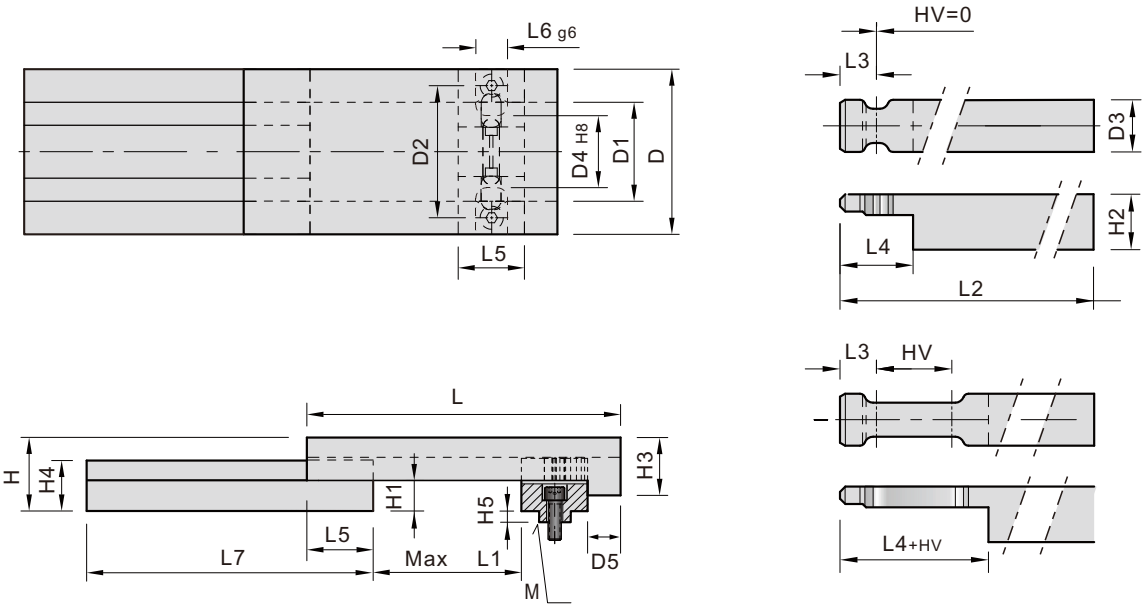

Code	D	HV	D1	D2	D3	D4	D5	H	H1	H2	H3	H4	H5	L	L1	L2	L3	L4	L5	L6	L7	M
C5330-11-0 -41	50	0	30	38	15	22	10	22.3	9.3	16	17.5	16	4	146	91	146	10	21	20	10	146	M6×20
C5330-11-25-41		25																				
C5330-11-50-41		50																				
C5330-11-75-41		75																				
C5330-16-0 -41	75	0	45	56	20	30	15	30.3	12.3	21	23.5	21	5	196	116	196	15	31	30	12	196	M8x25
C5330-16-25-41		25																				
C5330-16-50-41		50																				
C5330-16-75-41		75																				
C5330-21-0 -41	90	0	60	72	25	38		37.5	15.5	27	29	27	6	246	154	246	18	38	36	14	246	M10x30
C5330-21-25-41		25																				
C5330-21-50-41		50																				
C5330-21-75-41		75																				

C5330

锁模扣
Latch locks
Mat：1.2379
Compability: STRACK Z4

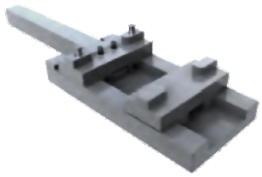

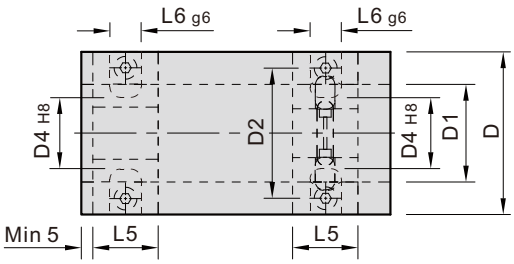

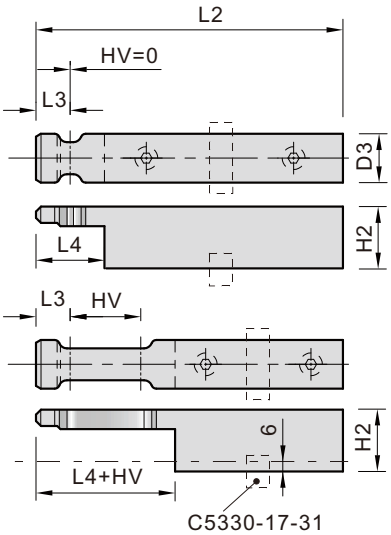

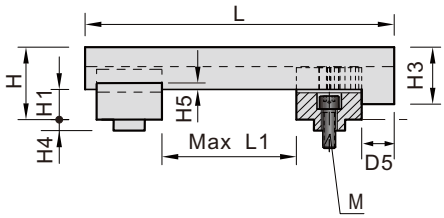

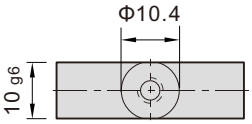

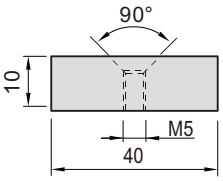

C5330-17-31

5

Code	D	HV	D1	D2	D3	D4	D5	H	H1	H2	H3	H4	H5	L	L1	L2	L3	L4	L5	L6	M
C5330-12-0 -0	50	0	30	38	15	22	10	22.3	9.3	17.5	22	3	4	146	91	146	10	21	20	10	M6×20
C5330-12-25-0		25																			
C5330-12-50-0		50																			
C5330-12-75-0		75																			
C5330-17-0 -0	75	0	45	56	20	30	15	30.3	12.3	23.5	27	4.5	5	196	116	196	15	31	30	12	M8x20
C5330-17-25-0		25																			
C5330-17-50-0		50																			
C5330-17-75-0		75																			
C5330-22-0 -0	90	0	60	72	25	38		37.5	15.5	29	33	6	6	246	154	246	18	38	36	14	M10x30
C5330-22-25-0		25																			
C5330-22-50-0		50																			
C5330-22-75-0		75																			

C5330

锁模扣
Latch locks
Mat：1.2379
Compability: STRACK Z4

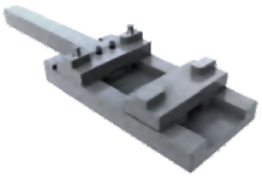

C5330-30-HV-L3-L4-L5-L6

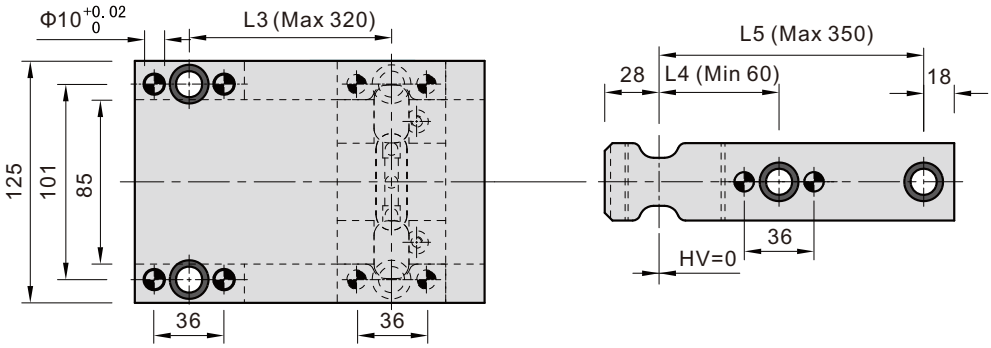

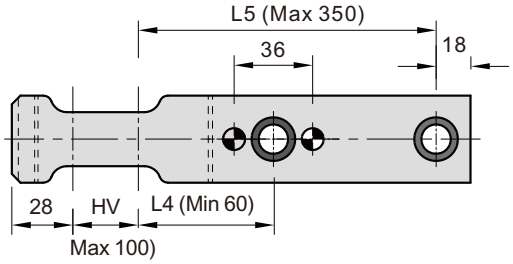

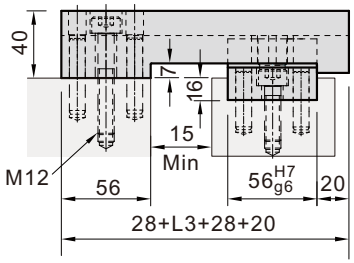

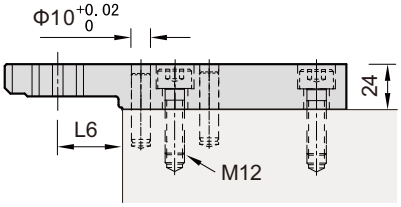

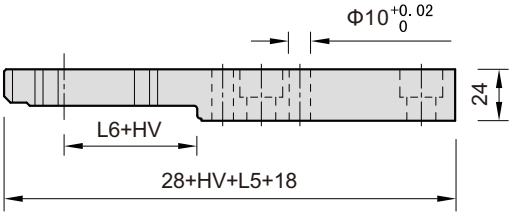

C5335

锁模扣
Latch locks
Mat：1.2344
Compability: STRACK Z5

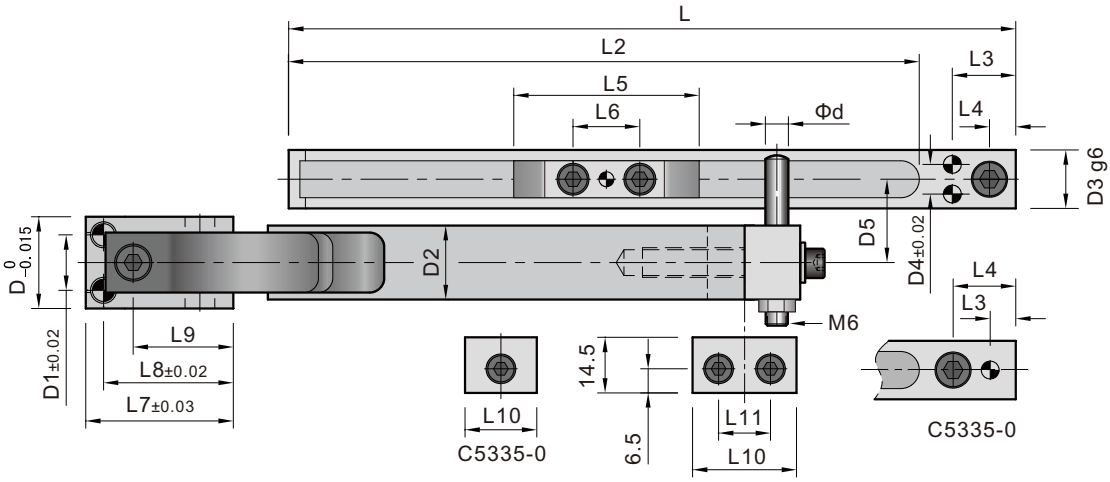

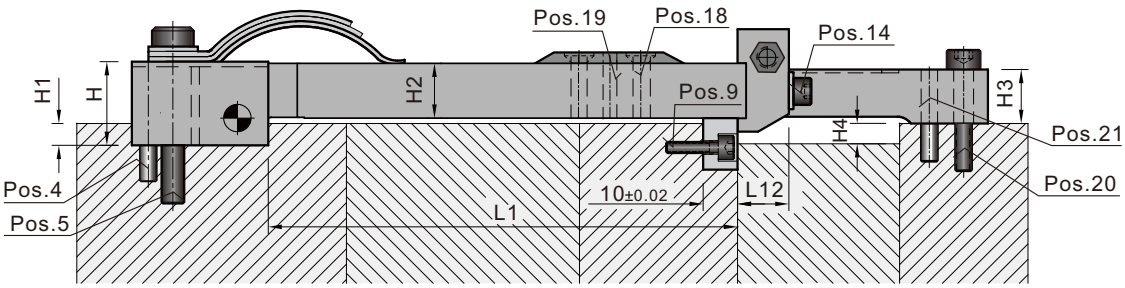

Code	D	D1	D2	D3	D4	D5	H	H1	H2	H3	H4	L	L1	L2	L3	L4	L5
C5335-0	24.8	15	20	15.8	-	21	24.5	7.5	16	15.8	5	196	137	170	6	16	50
C5335-1	30	16	25	20	10	25.5	40	14.5	25	20	6	200	170		16.5	8	
C5335-2	40	20	30	30		31	56		40	30	8.5	396	256	356	19.5	10	75

L6	L7	L8	L9	L10	L11	L12	d	Pos.4	Pos.5	Pos.9	Pos.14	Pos.18	Pos.19	Pos.20	Pos.21
18	39.8	35	27	20	18	15	6.2	Ø 6×32	M 8×40	M4×12	M 8×25	M4×12	M4×16	M8×30	Ø6×24
	60	52	40	30.1		20	8.2	Ø 8×40	M10×55		M10×30	M5×12			Ø6×32
20	80	70	55	30		27	10.2	Ø10×60	M12×70		M16×50	M5×16		M8×40	Ø6×40

C5338

锁模扣
Latch locks
Mat：1.2344
Compability: RABOURDIN REF

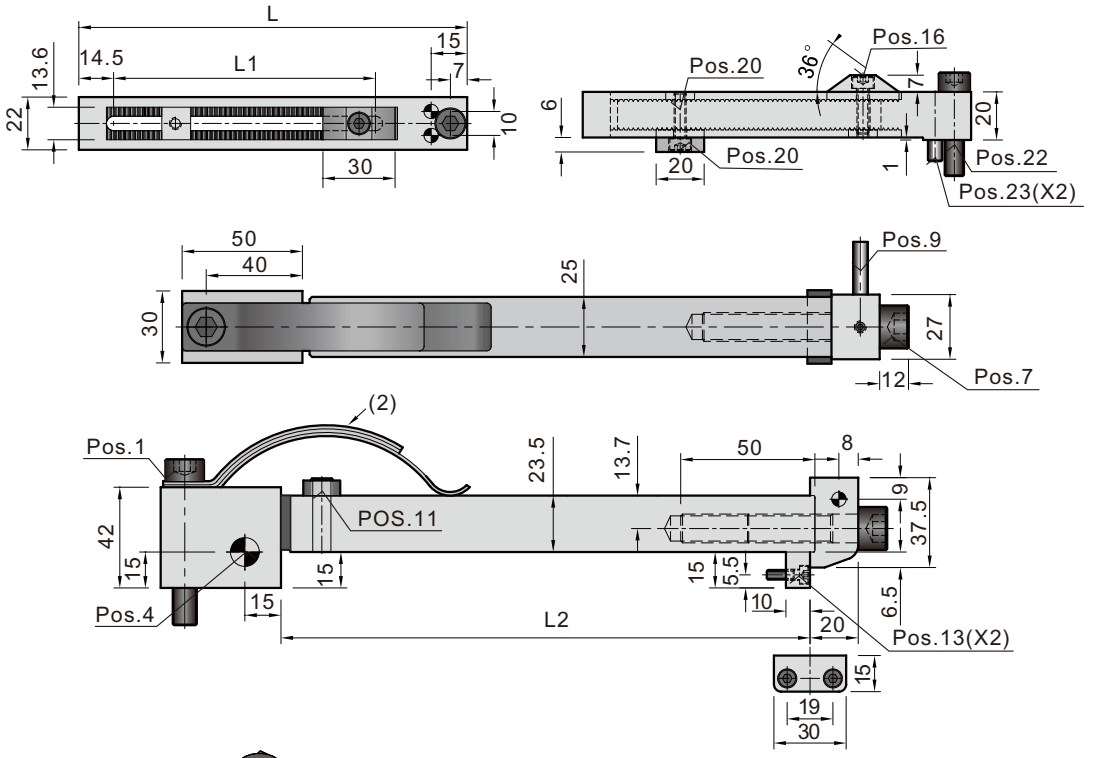

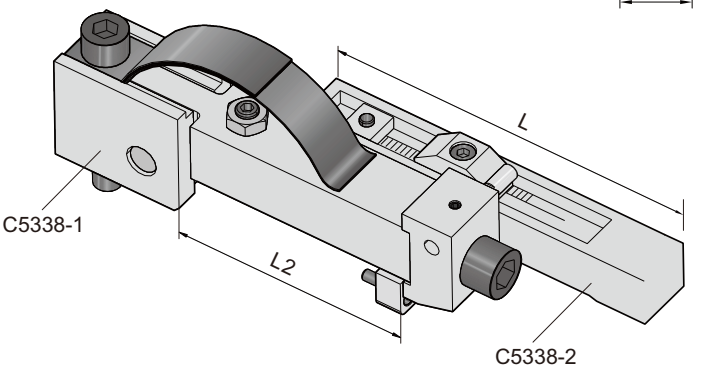

Code	L	L2	L1
C5338-140- 90	**140**	**90**	83.5
C5338-204-170	**204**	**170**	152
C5338-254-220	**254**	**220**	194.5

Code	L	L1
C5338-140-1	**140**	83.5
C5338-204-1	**204**	152
C5338-254-1	**254**	194.5

Code	L2
C5338-90 -2	**90**
C5338-170-2	**170**
C5338-220-2	**220**

Pos									
Pos.1	Pos.4	Pos.7	Pos.9	Pos.11	Pos.13	Pos.16	Pos.20	Pos.22	Pos.23
M10×60	Ø12×30	M12×40	Ø12×40	M8	M4×14	M5×20	M5×20	M8×35	Ø6×40

C5410

内锁模扣
Latch locks
Mat : 1.2379
Compability: STRACK Z3

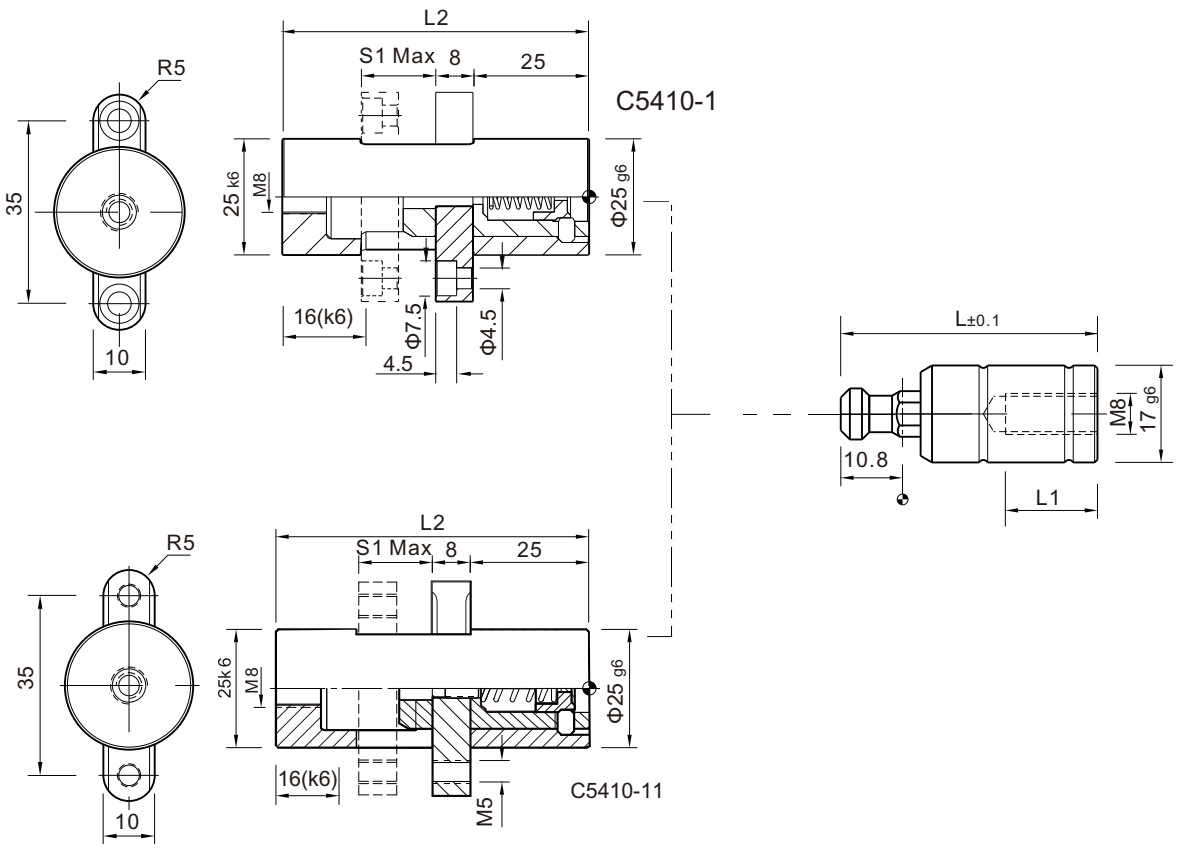

Code	S1 max.	L	L1	L2
C5410-1-16- 45	16	45	20	66
C5410-1-16- 70		70	40	
C5410-1-16-100		100		
C5410-1-40-100	40			90
C5410-1-40-125		125		
C5410-1-60-125	60			110
C5410-1-60-150		150		

C5410

内锁模扣
Latch locks
Mat：1.2379
Compability: STRACK Z3

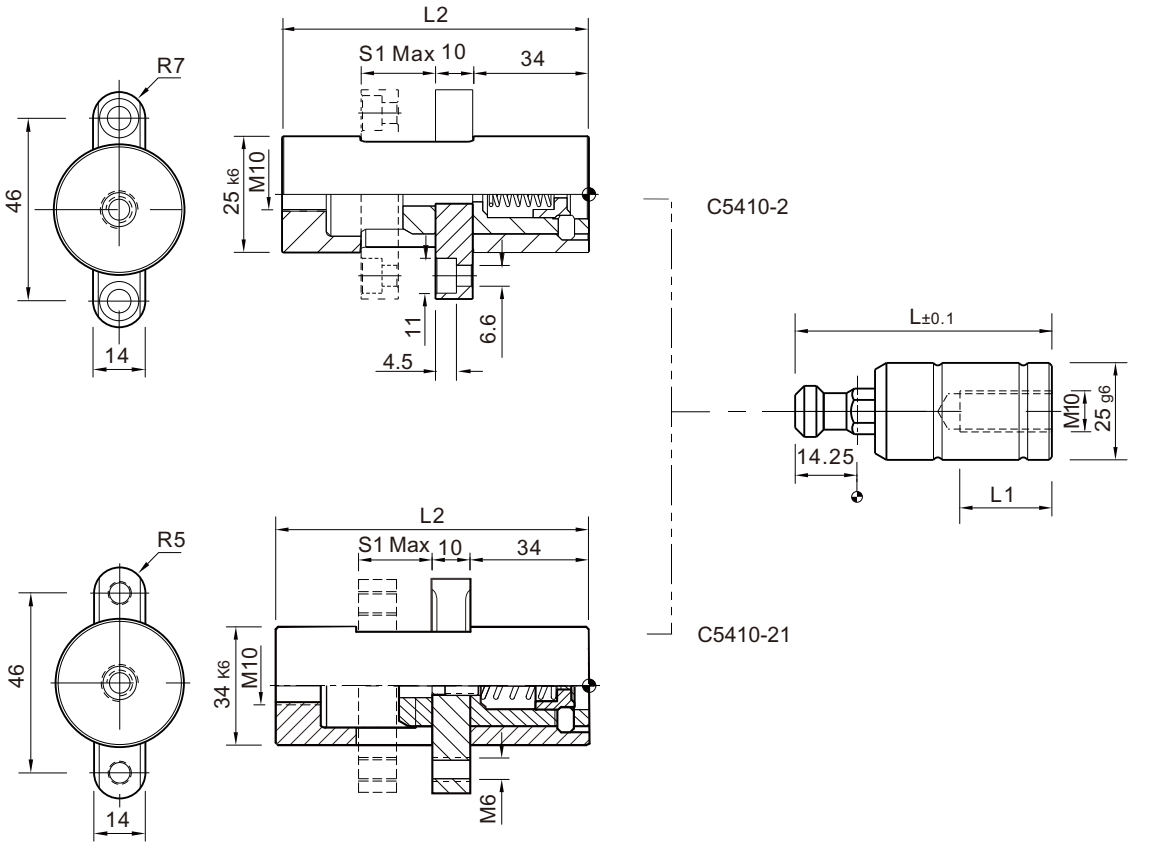

Code	S1 max.	L	L1	L2
C5410-2-25 - 70	25	70	40	86
C5410-2-25 -120		120		
C5410-2-25 -170		170		
C5410-2-50 -120	50	120		111
C5410-2-50 -170		170		
C5410-2-75 -120	75	120		136
C5410-2-75 -170		170		
C5410-2-100-220	100	220		161
C5410-2-100-270		270		
C5410-2-125-220	125	220		186
C5410-2-125-270		270		
C5410-2-150-220	150	220		211
C5410-2-150-270		270		

C5410

内锁模扣
Latch locks
Mat：1.2379
Compability: STRACK Z3

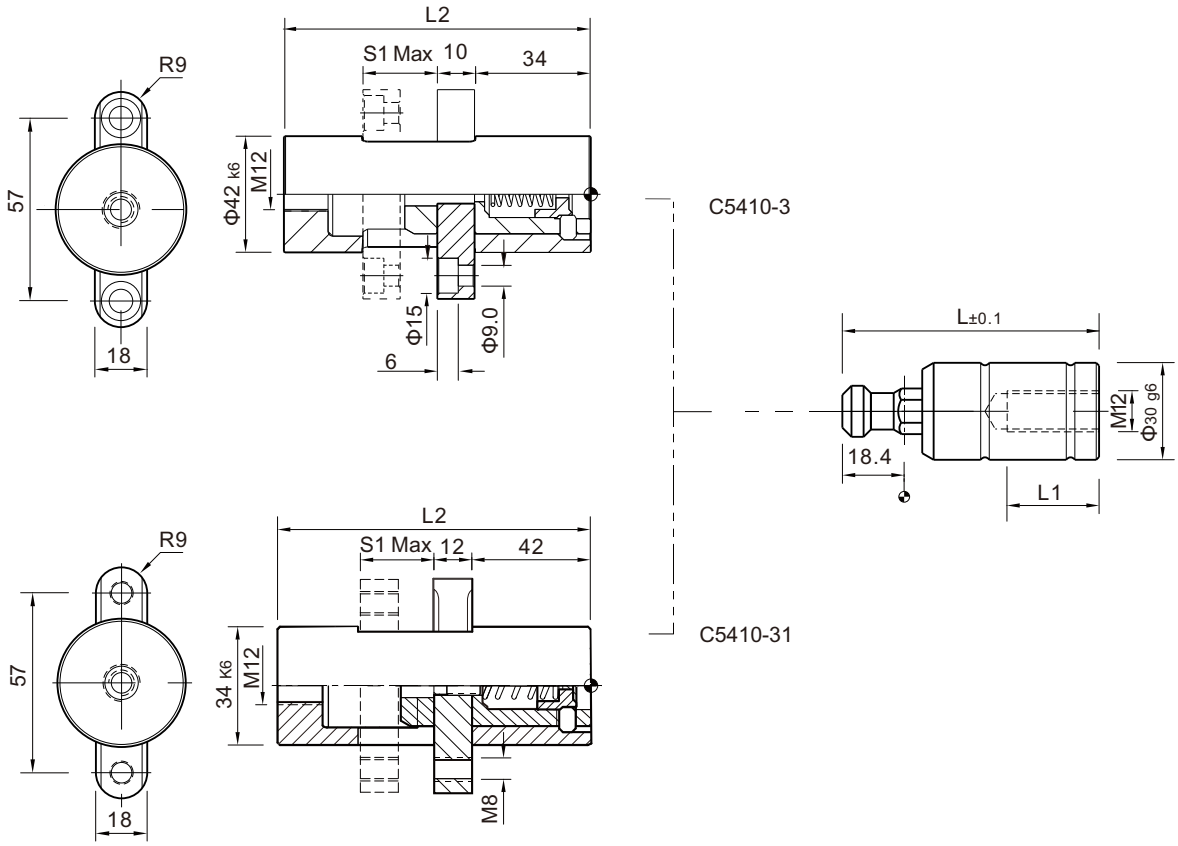

Code	S1 max.	L	L1	L2
C5410-3-50 -125	50	125	50	130
C5410-3-50 -175		175		
C5410-3-50 -225		255		
C5410-3-75 -175	75	175		155
C5410-3-75 -225		225		
C5410-3-100-175	100	175		180
C5410-3-100-225		225		
C5410-3-125-275	125	275		205
C5410-3-125-325		325		
C5410-3-150-275	150	275		230
C5410-3-150-325		325		
C5410-3-175-275	175	275		255
C5410-3-175-325		325		

C5420

内锁模扣
Latch locks
Mat : 1.2344
Compability: HASCO Z173

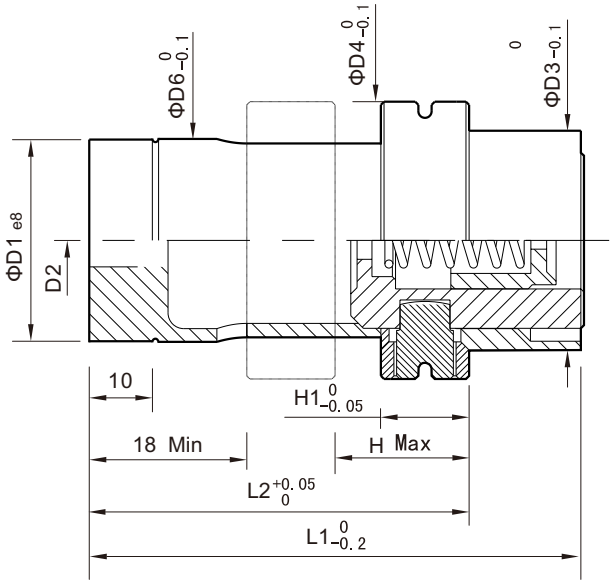

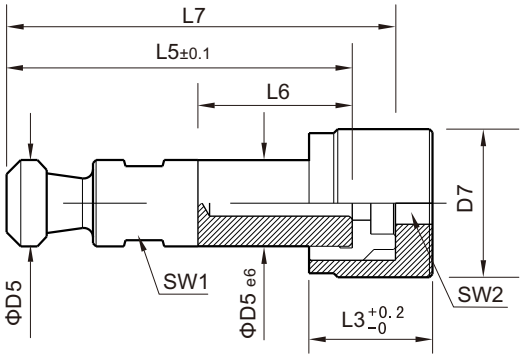

Code	D1	Hmax.	D5	L7	L1	L2	L3	L5	L6	D3	D4	D5	D6	D7	D2	SW1	SW1
C5420-32-28-14- 63	32	28	14	63	78	60	14	56	20	34.8	44.8	14	32.2	18.5	M10	12	15
C5420-32-28-14- 80				80				73	25								
C5420-32-28-14-100				100				93									
C5420-32-28-14-125				125				118									
C5420-32-56-14- 63		56		63	106	88		56									
C5420-32-56-14- 80				80				73									
C5420-32-56-14-100				100				93									
C5420-32-56-14-125				125				118									
C5420-38-36-18- 80	38	36	18	80	90	70	16	73	20	40.8	51.8	16	38.2	23.5	M12	15	19
C5420-38-36-18-100				100				93	30								
C5420-38-36-18-125				125				118									
C5420-38-36-18-140				140				133									
C5420-38-71-18- 80		71		80	125	105		73									
C5420-38-71-18-100				100				93									
C5420-38-71-18-125				125				118									
C5420-38-71-18-140				140				133									

C5430

内锁模扣
Latch locks
Mat：1.2379
Max：180°C
Compability: MEUSBURGER E1840

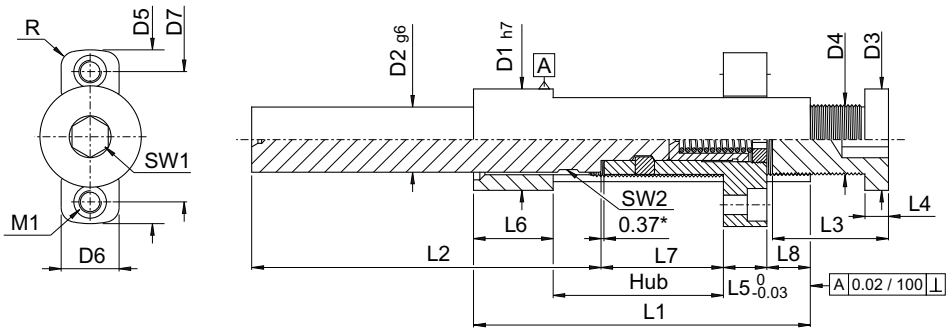

Code	D1	L1	L2	L3	D2	D3	D4	D5	D6	D7	L4	L5	L6	L7	L8	R	SW1	SW2	M1	M2	Hub max. / Stroke max.
C5430-23-64 -103-21	23	64	103	21	14	24	M17x1	44	12.4	32	5	11	19	29.3	10	3	8	11	M5	M6	24
C5430-23-64 -103-26				26							6										
C5430-23-64 -183-21			183	21							5										
C5430-23-64 -183-26				26							6										
C5430-23-80 -103-21		80	103	21							5										40
C5430-23-80 -103-26				26							6										
C5430-23-80 -183-21			183	21							5										
C5430-23-80 -183-26				26							6										
C5430-28-76 -110-26	28	76	110	26	18	28	M21x1.5	48	16	36		12	22	33.3	12	4	10	14		M8	30
C5430-28-76 -110-35				35							8										
C5430-28-76 -220-26			220	26							6										
C5430-28-76 -220-35				35							8										
C5430-28-102-110-26		102	110	26							6										56
C5430-28-102-110-35				35							8										
C5430-28-102-220-26			220	26							6										
C5430-28-102-220-35				35							8										
C5430-34-98 -130-26	34	98	130	26	22	32	M25x1.5	58	20	44	6	14	30	42.3		5	12	17	M6	M10	42
C5430-34-98 -130-35				35							8										
C5430-34-98 -260-26			260	26							6										
C5430-34-98 -260-35				35							8										
C5430-34-134-130-26		134	130	26							6										78
C5430-34-134-130-35				35							8										
C5430-34-134-260-26			260	26							6										
C5430-34-134-260-35				35							8										
C5430-46-132-160-45	46	132	160	45	30	40	M32x1.5	78	26	60	10	18	40	56.3	16	7	14	24	M8	M12	58
C5430-46-132-160-55				55							12										
C5430-46-132-320-45			320	45							10										
C5430-46-132-320-55				55							12										
C5430-46-180-160-45		180	160	45							10										106
C5430-46-180-160-55				55							12										
C5430-46-180-320-45			320	45							10										
C5430-46-180-320-55				55							12										

5

C5500

加速顶出
Accelerated ejectors
Mat：1.2379
Compability: CUMAS EP

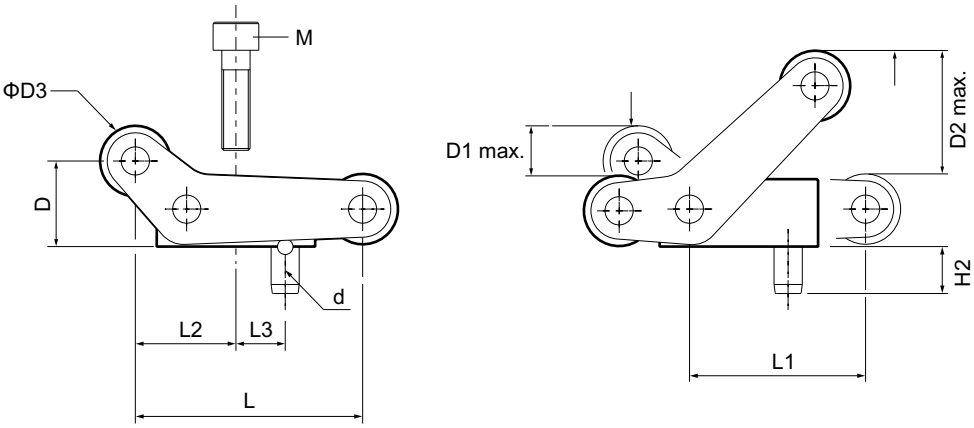

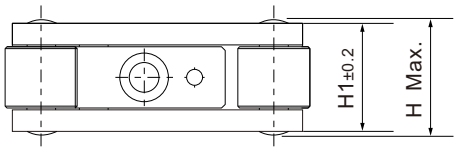

Code	L1	D3	H1	D	D1 max.	D2 max.	H	H2	L	L2	L3	d	M	F(N)
C5500-200813	**20**	**8**	**13.2**	9.4	4.4	11.6	15	5	25.8	11.4	6	Ø2.5x10	M3x12	1225
C5500-251016	**25**	**10**	**16**	11.8	5.7	15	18.5	6	32.3	14.3	7	Ø3x 12	M4x16	2450
C5500-371522	**37.5**	**15**	**22**	17.7	9.1	23.5	25	8	48.5	21.5	10.5	Ø4x 16	M6x25	3430
C5500-502030	**50**	**20**	**30**	23.6	12.5	32	34	10	64.6	28.6	14	Ø5x 20	M8x30	7840

C5510

早回机构

Early return mechanism

Mat：1.2379

Compability: CUMAS AE

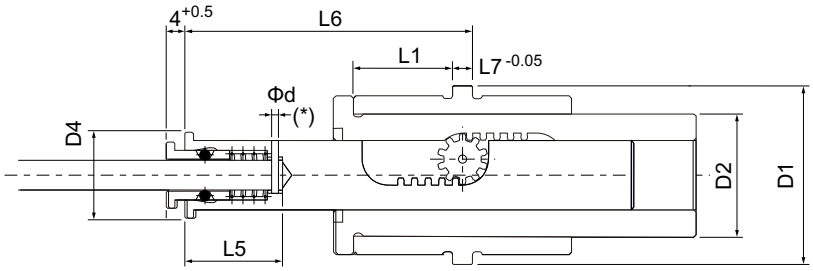

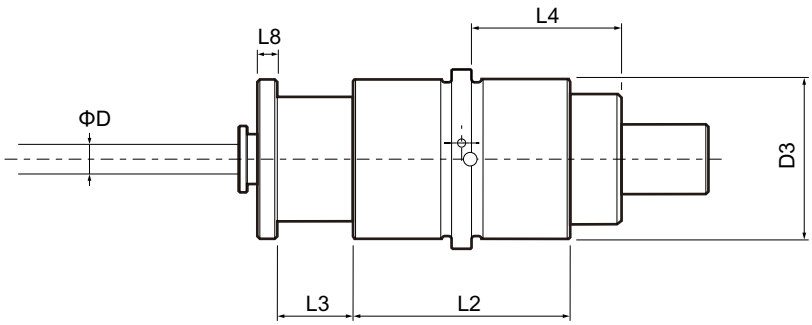

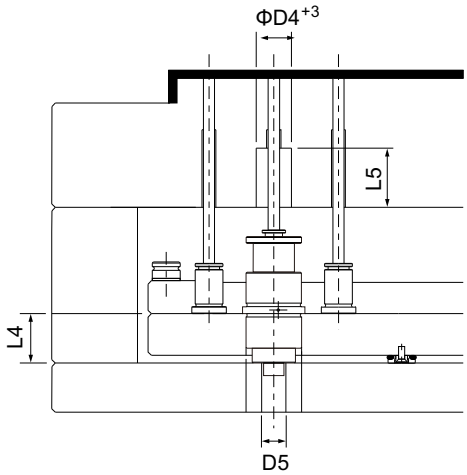

Code	D	D2	D3	D1	D4	D5	L1	L2	L3	L4	L5	L6	L7	L8	d
C5510-031620	3	16	20	22	12.5	13	14	32	8	17	22	37	4	3	-
C5510-041620	4														
C5510-052430	5	24	30	34	16	16	20	44	15	27	36	57			Φ2
C5510-062430	6														
C5510-082430	8				17	17									
C5510-103036	10	30	36	40	21.5	21	28	62	20	34	46	78	6	4	
C5510-123036	12														

C5520

加速顶出
Accelerated ejectors
Mat：1.2379
Compability: STRACK Z141

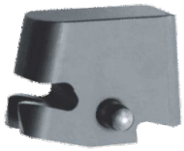

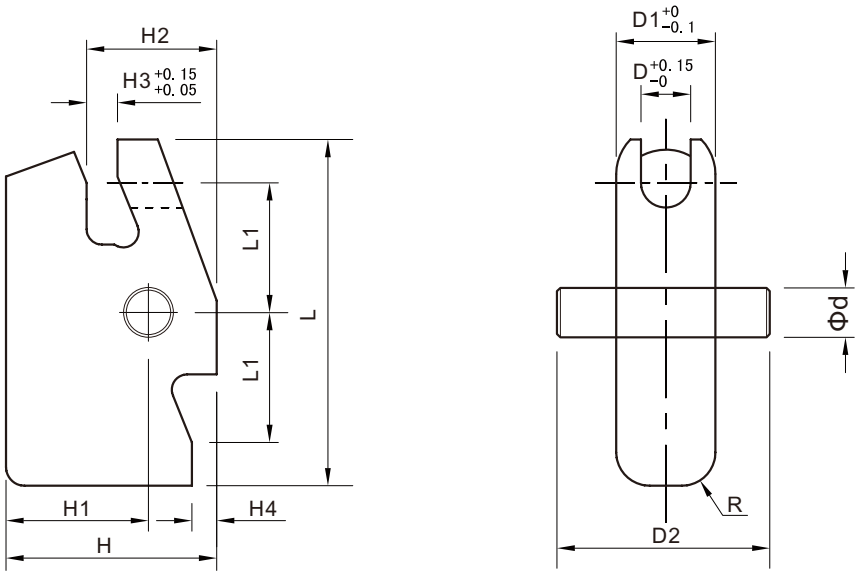

Code	D	D1	D2	H	H1	H2	H3	H4	L	L1	R	d
C5520-3	**3**	8	16	19	14	10	3	2	26	10	4	4
C5520-6	**6**	16	36	34	23	21	5	4	56	21	8	8
C5520-8	**8**											

C5550

侧抽芯
Slide units
Mat：1.2344
Compability: HASCO Z181

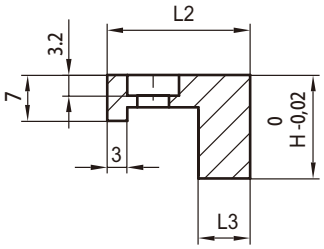

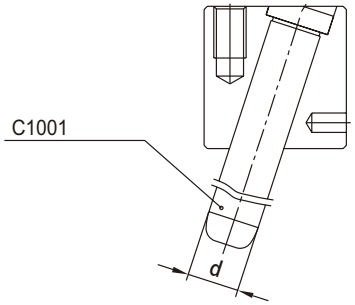

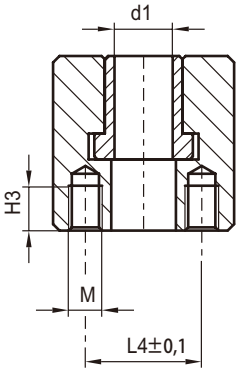

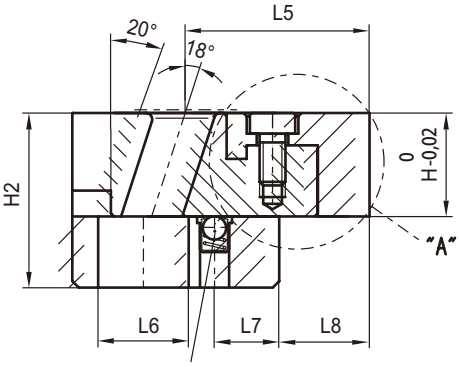

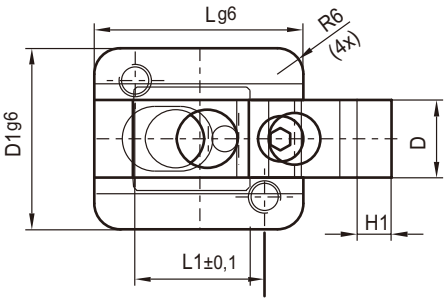

5

Code	d	D	H	D1	H1	H2	H3	L	L1	L2	L3	L4	L5	L6	L7	L8	d1	M	POS.1
C5550- 8-12-16	**8**	**12**	**16**	28	5	27	8	32	20	22	8	18	28.5	14	10	14.3	9	M5	C1001- 8-50
C5550-10-16-18	**10**	**16**	**18**	32	6.5	32	10	40	29	25	10	20	32.5	17	12	15.3	11	M6	C1001-10-60

C5551

侧抽芯
Slide units
Mat：1.2344
Compability: HASCO Z1810

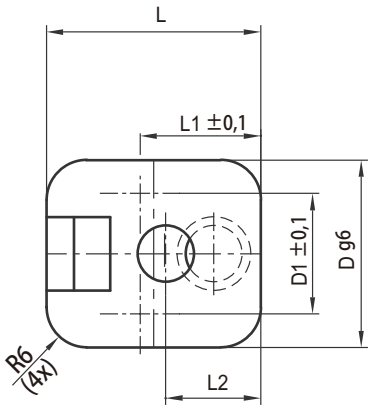

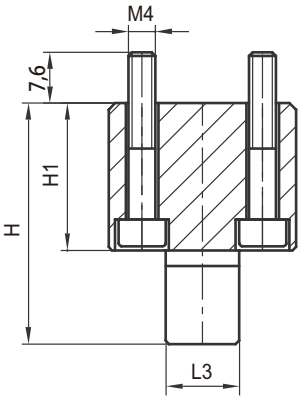

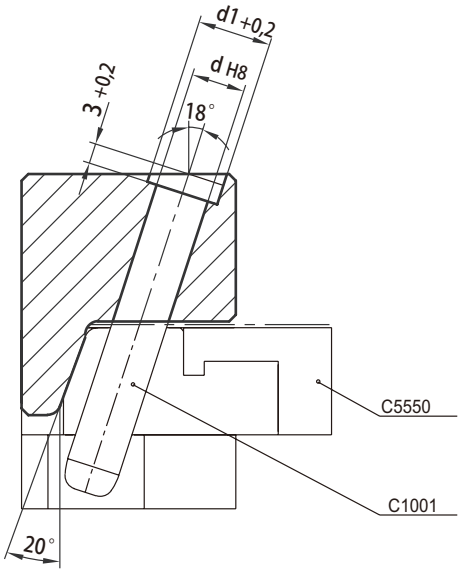

Code	d	D	D1	H	H1	L	L1	L2	L3	d1	M
C5551- 8	**8**	28	18	36	22	32	18	14.2	11	11	M4X25
C5551-10	**10**	32	20	44	27	40	22	17.2	15	13	M4X30

C5552

侧抽芯
Slide units
Mat：1.2344
Compability: HASCO Z1811

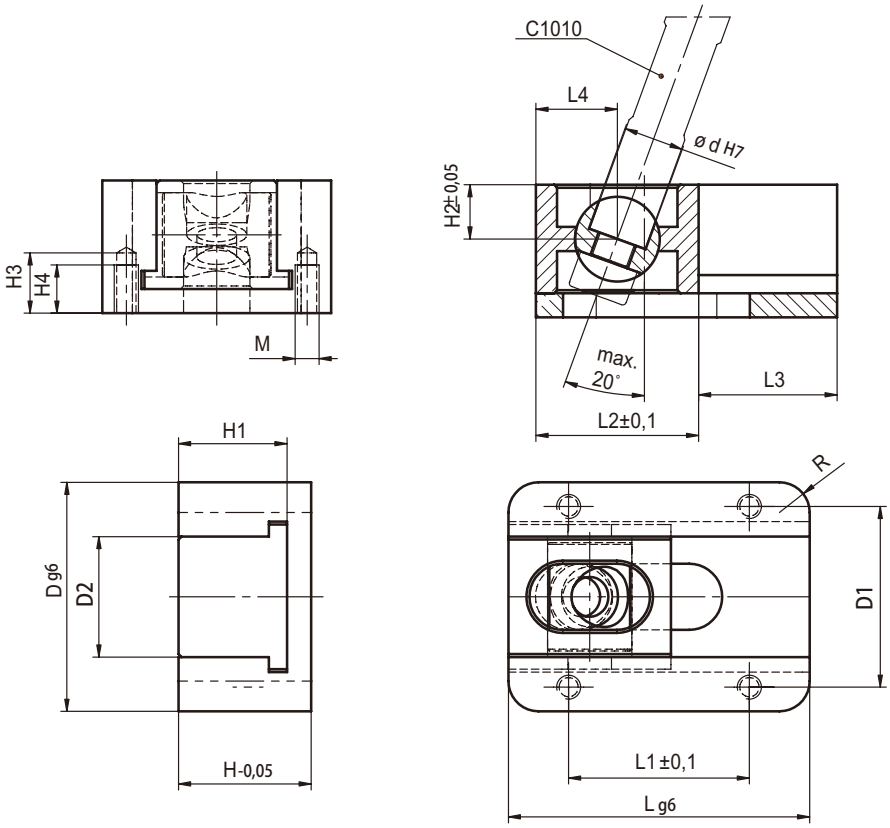

Code	d	D	D1	D2	H	H1	H2	H3	H4	L	L1	L2	L3	L4	R	M
C5552-10	**10**	40	32	20	25	20	8.5	12	10	50	30	27	23	13.5	5	M5
C5552-14	**14**	48	39	25	35	28	12.5	14	12	70	50	35	35	17.5	6	M6

C5553

侧抽芯
Slide units
Mat：1.2344
Compability: HASCO Z1812

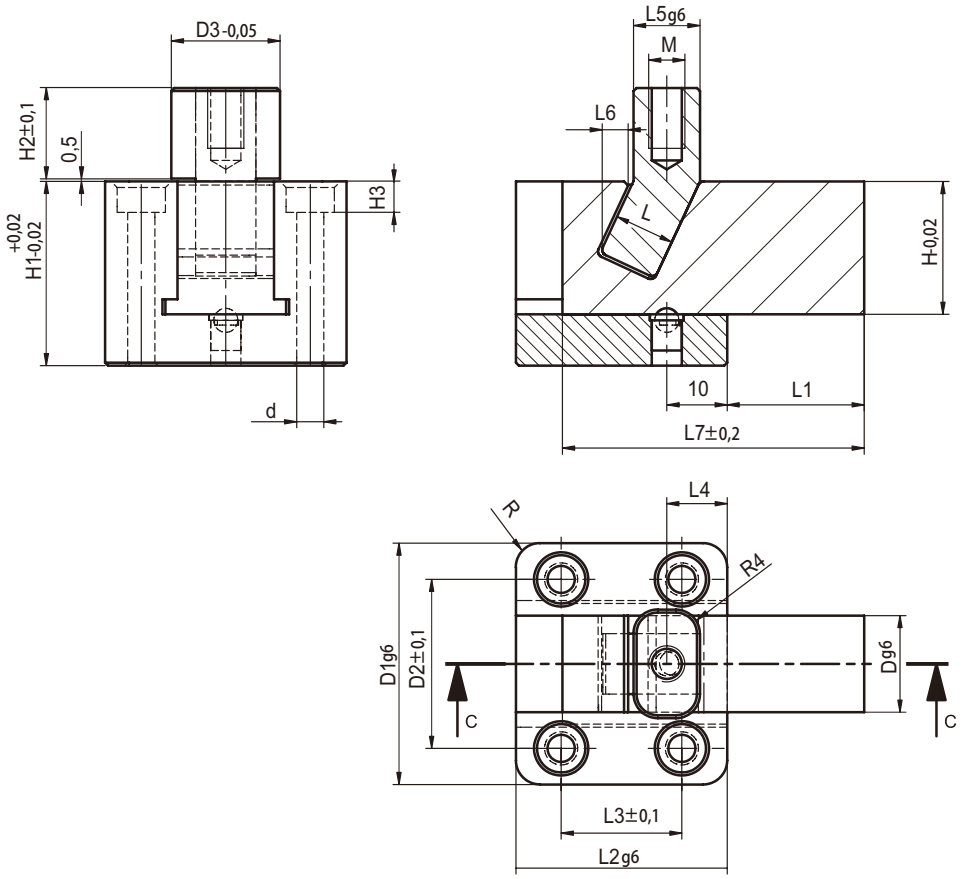

Code	L	D	H	D1	D2	D3	H1	H2	H3	L1	L2	L3	L4	L5	L6	L7	R	d	M
C5553-10-16-22	**10**	**16**	**22**	40	28	22	30	17	4.6	22.9	35	20	10	11	4.6	52	6	4.5	M6
C5553-12-25-30	**12**	**25**	**30**	55	40	30	40	20	6.8	33.8	50	35	15	13	7	75	7	6.6	M8

C5554

侧抽芯
Slide units
Mat : 1.2344
Compability: HASCO Z1813

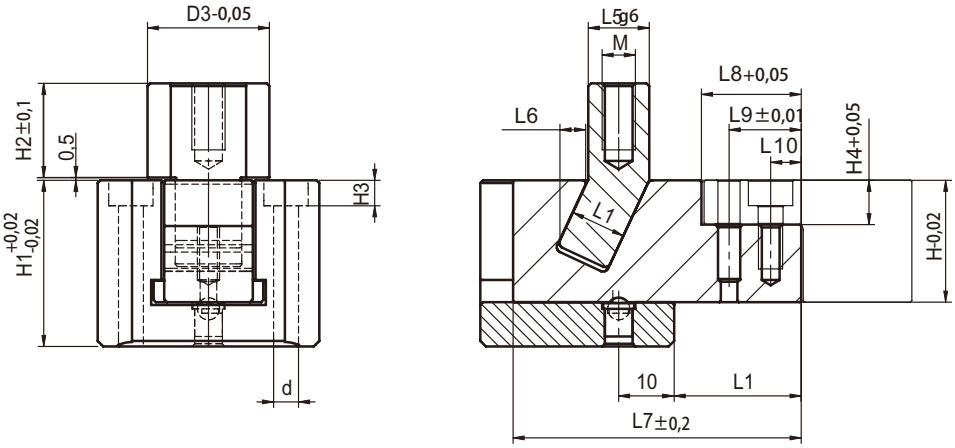

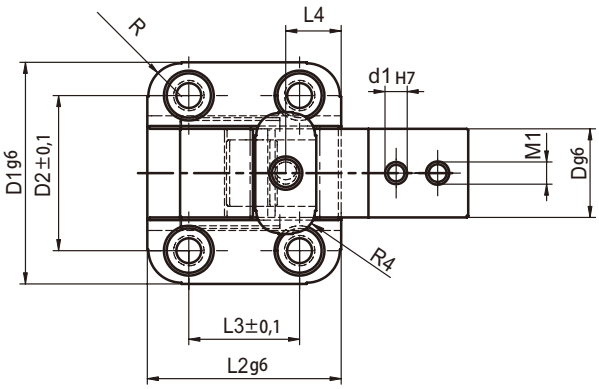

Code	L	D	H	D1	D2	D3	H1	H2	H3	H4	L1	L2	L3	L4	L5	L6	L7	L8	L9	L10	R	d	d1	M	M1
C5554-10-16-22	**10**	**16**	**22**	40	28	22	30	17	4.6	8	22.9	35	20	10	11	4.6	52	18	13	5.5	6	4.5	4	M6	M4
C5554-12-25-30	**12**	**25**	**30**	55	40	30	40	20	6.8	10	26.8	50	35	15	13	7	68	20	16	7	7	6.6	5	M8	M6

C5600

侧抽芯

Slide units

Mat：1.2344

Compability: STRACK Z4290

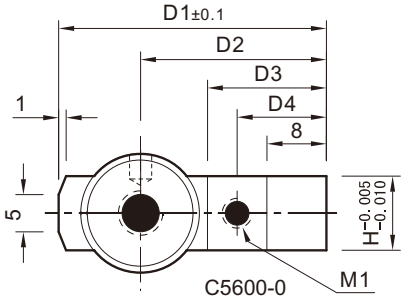

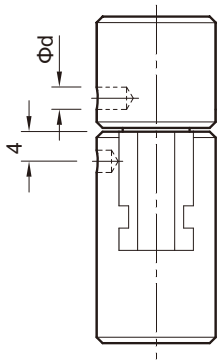

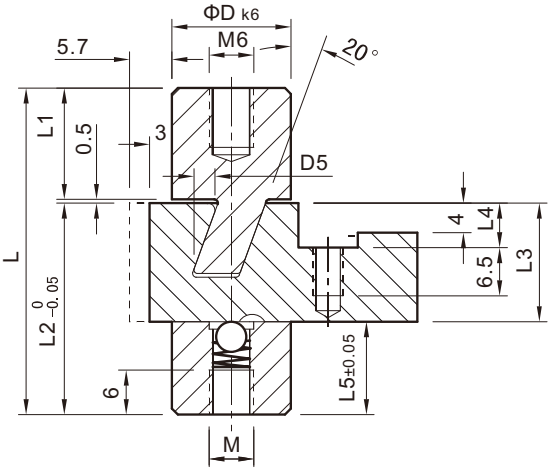

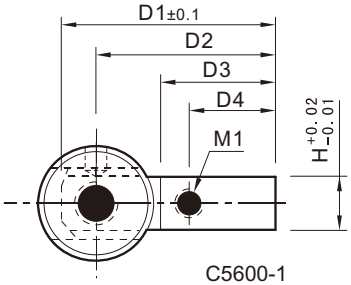

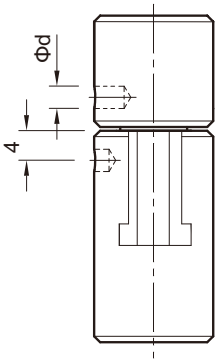

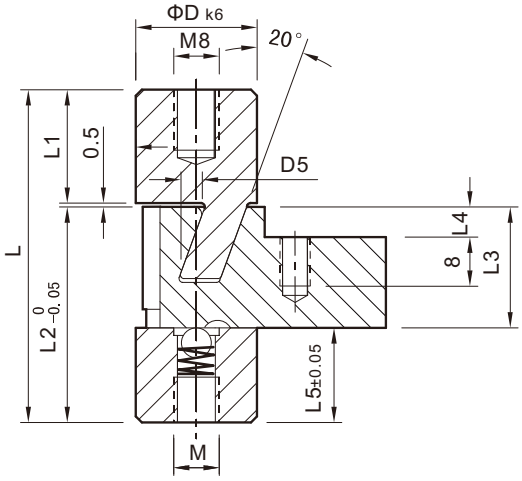

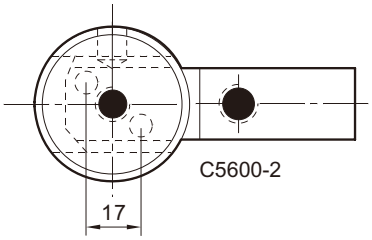

Code	D	D1	D2	D3	D4	D5	H	L	L1	L2	L3	L4	L5	d	M	M1
C5600-0	16	36	25	16	12	2.7	10	44	15	28.5	16	6	12.5	Φ3	M6	M4
C5600-1	25	32.8	24.2	13.9	10.8	3.4	11	61.5	26.5	34.5	18	2.5	16.5			M3
C5600-2	40	50	37	20	8	6.4	22	60.5	20	40	28	8	12	Φ4	M8	M5

C5780

斜导柱固定座

Angle pin housing

Mat：1.2312

Compability: CUMAS BG

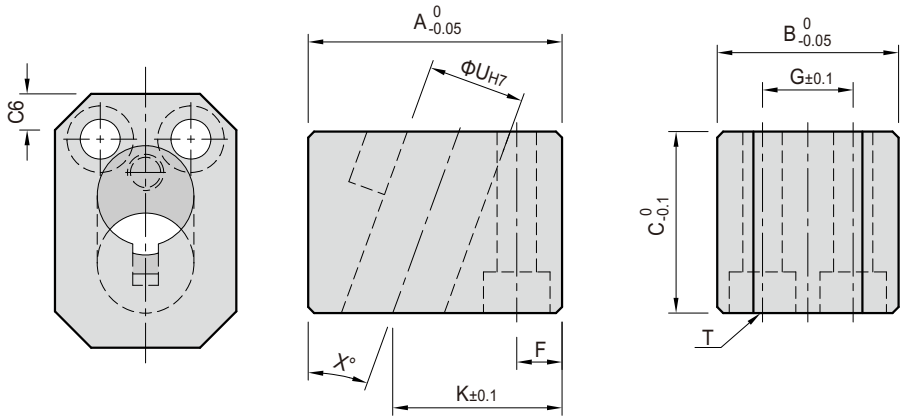

5

Code	U	X°	A	B	C	F	G	K	T
C5780-16-15	16	15	42	30	30	7.5	15	28	M 6×35
C5780-20-15	20		50	40	36	9	22	34	M 8×40
C5780-24-15	24		55		40			38	M 8×45
C5780-28-15	28		65	50	45	12	26	45	M10×50
C5780-16-20	16	20	42	30	30	7.5	15	28	M 6×35
C5780-20-20	20		50	40	36	9	22	34	M 8×40
C5780-24-20	24		55		40			38	M 8×45
C5780-28-20	28		65	50	45	12	26	45	M10×50

C5781

斜导柱固定座
Angle pin housing
Mat：1.2510
Compability: CUMAS GR

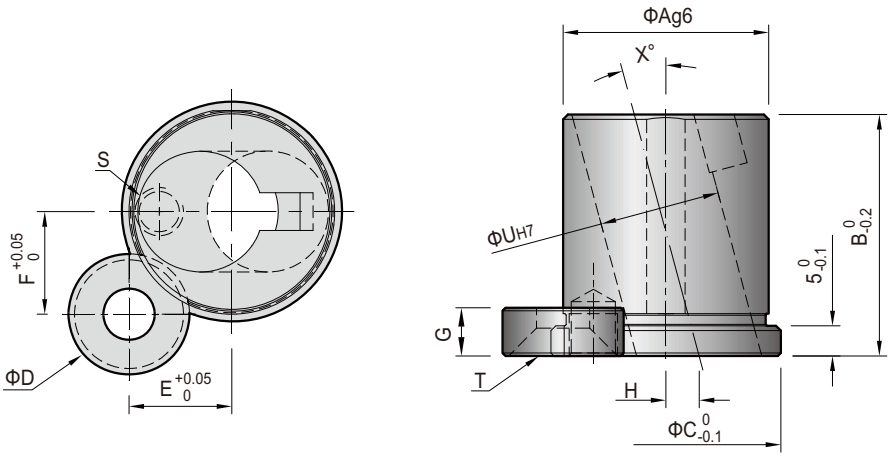

Code	U	X°	A	B	C	D	E	F	G	H	S	T
C5781-10-10	**10**	**10**	18	26	22	12	10.8	7.5	6	3.8	M5x5	M5x16
C5781-12-10	**12**		22	28	26	16	11	11		4	M6x6	M6x16
C5781-16-10	**16**		28	34	32		13	13		5		
C5781-20-10	**20**		34	40	38	20	17	17	8	5.5	M8x6	M8x20
C5781-24-10	**24**		42	45	46		19.5	19.5		6		
C5781-28-10	**28**		46	50	50		21	21		7		
C5781-10-15	**10**	**15**	18	26	22	12	10.8	7.5	6	3.8	M5x5	M5x16
C5781-12-15	**12**		22	28	26	16	11	11		4	M6x6	M6x16
C5781-16-15	**16**		28	34	32		13	13		5		
C5781-20-15	**20**		34	40	38	20	17	17	8	5.5	M8x6	M8x20
C5781-24-15	**24**		42	45	46		19.5	19.5		6		
C5781-28-15	**28**		46	50	50		21	21		7		

C5800

二次顶出

Two-stage ejectors

Mat：1.3503 / 58-60HRC

Compability: HASCO Z169

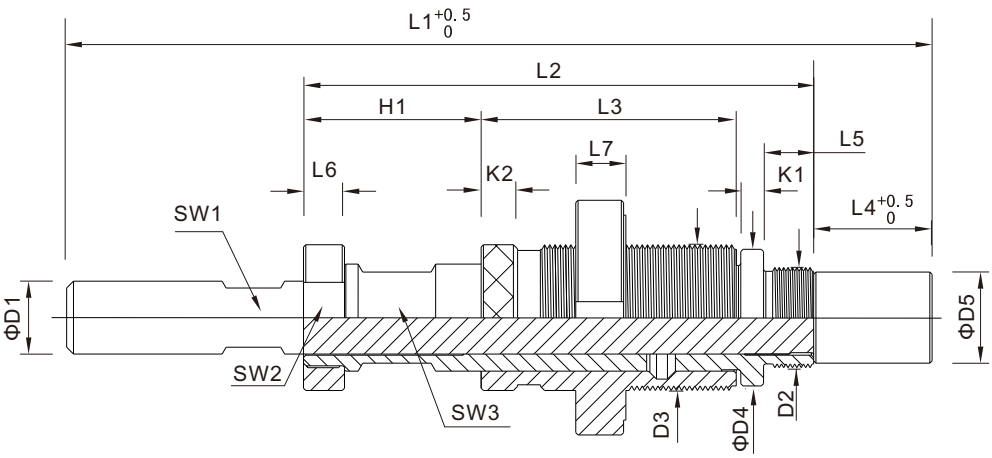

Code	D1	D2	D3	D4	D5	L1	L2	L3	L4	L5	L6	L7	K1	K2	SW1	SW2	SW3	H1		H2	
																		min.	max.	min.	max.
C5800-16	**16**	M22× 1	M32×1.5	**30**	20	164	112	56	26	11	9	11	5	8	13	28	20	5	30	3	50
C5800-22	**22**	M30×1.5	M42×1.5	40	28	220	148	75	36	16		12	6	10	17	38	27	6	40	4	70
C5800-30	**30**	M40×1.5	M60×1.5	50	38	255	170	80	45	21	11	13	7		24	55	38	7	50		
C5800-40	**40**	M52×1.5	M70×1.5	60	50	270	200	98		22	12	14	8	14	32	65	46	7.5	60	5	80

C5810

二次顶出

Two-stage ejectors

Mat：1.3503 / 58-60HRC

Compability: HASCO Z1691

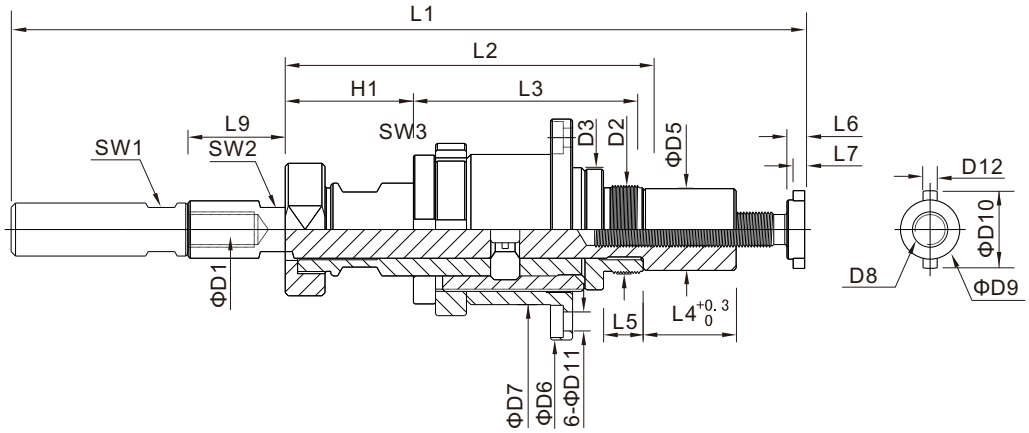

Code	D1	D2	D3	D5	D6	D7	D8	D9	D10	D11	D12	H1	Hz	L1	L2	L3	L4	L5	L6	L7	L9	SW1	SW2	SW3
C5810-13	**13**	M20× 1	M28×1.5	18.5	50	41.6	M8X0.75	13.4	17.6	4.3	3.2	3-20	44	164	72	38.8	21	9	4	2.6	22	10	10	17
C5810-17	**17**	M24×1.5	M35×1.25	22	60	48	M11× 1	17.4	22	5.4	4	4-30	65	228	110	63		12	5	3.5	25	13	13	21
C5810-22	**22**	M30×1.5	M45×1.5	28	75	61	M14× 1	21	27	6.5	5	6-42	80	270	131	74	17	17	6	4	30	17	17	27
C5810-30	**30**	M40×1.5	M60×1.5	38	100	82	M18× 1	26	33	8.8	6	10-60	95	340	166	89	27		7	5	38	24	24	36
C5810-40	**40**	M55×1.5	M75×1.5	52	125	104	M25×1.5	35	43	11	8	14-86	130	470	232	122	41	27	10	7	50	32	32	46
C5810-52	**52**	M72×1.5	M98× 2	69	150	128	M34×1.5	48	58	11	9	18-110	180	583	295	155	51		15	11	60	41	41	65

C5825

二次顶出

Two-stage ejectors

Mat：1.3503 / 58-60HRC

Compability: MEUSBURGER E1860

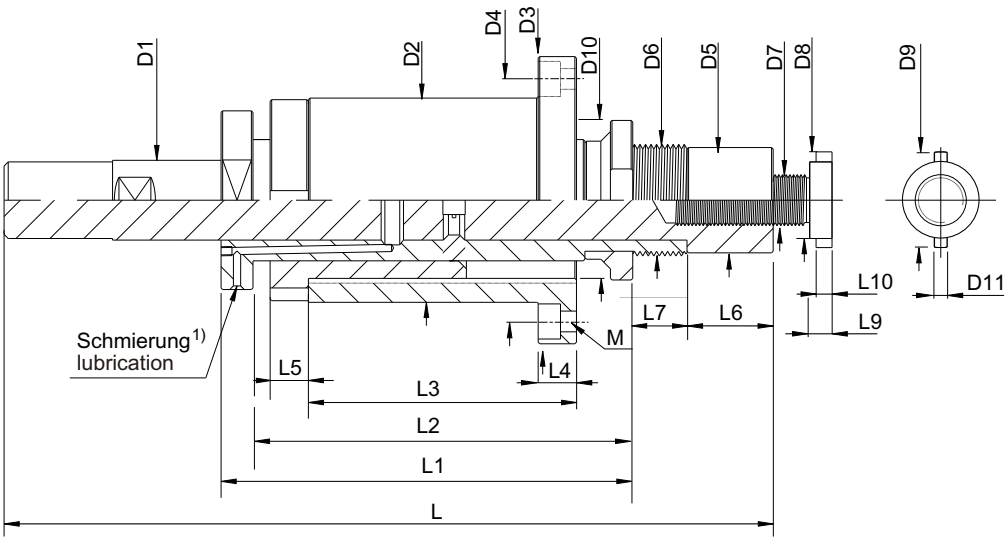

Code	D1	D2	D3	D4	D5	D6	D7	D8	D9	D10	D11	L	L1	L2	L3	L4	L5	L6	L7	L8	L9	M
C5825-15	**15**	38	55	46	18.7	M20x 1	M 9x 1	15.5	20	M31x1.25	3.5	157	90	82	54	8	10	19	12	5	3.6	M4
C5825-18	**18**	50	72	60	24	M26x1.5	M12x 1	18.5	23	M40x 1.5	4	190	101	92	64	10	8	17	17	6	4	M5
C5825-25	**25**	64	90	76	33	M35x1.5	M16x 1	24	30	M52x 1.5	5	241	129	119	84	12	10	27		7	5	M6
C5825-33	**33**	80	114	96	43	M45x1.5	M20x1.25	29	37	M66x 1.5	6	315	170	156	111	13	15	32	22	9		M8
C5825-44	**44**	100	138	118	56	M58x1.5	M28x 1.5	40	48	M84x 2	7	428	236	220	156	16	20	41	27	11	6	M10

C5830

二次顶出

Two-stage ejectors

Mat：1.3503 / 58-60HRC

Compability: CUMAS DX

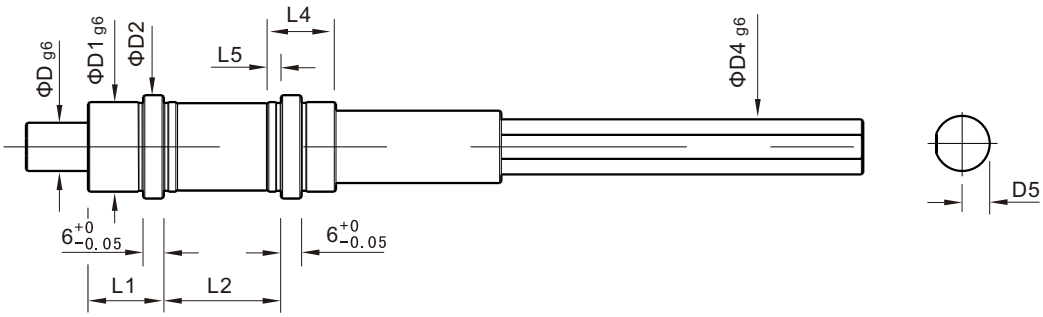

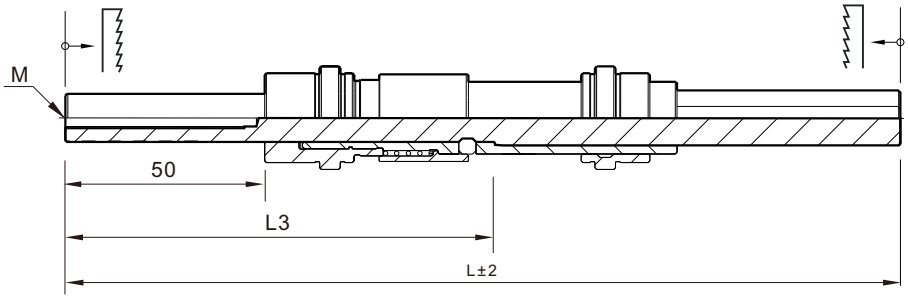

Code	D	D1	L1	D2	D3	D4	D5	L	L2	L3	L4	L5	M
C5830-142622	**14**	**26**	**22**	30	21	16	7.2	243	34	125	20	4	M6
C5830-163027	**16**	**30**	**27**	34	24	18	8	314	44	152	23	6	M8

C5840

复位机构
Round latch locks
Mat：1.2344 / 48-50HRC
Compability: HASCO Z163

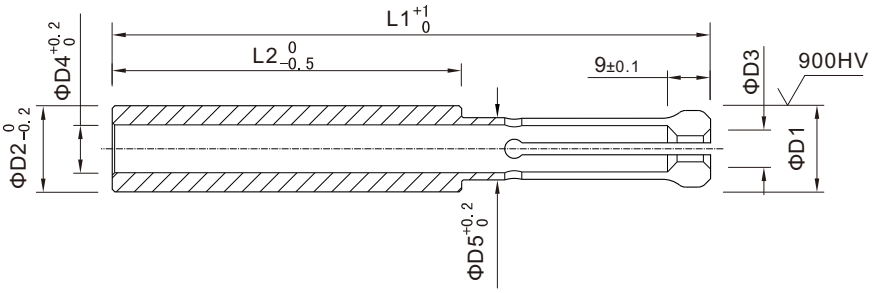

Code	D3	L1	D1	D2	D4	D5	L2	F(N) max.
C5840-6 -125	6	125	16	18	10	13	73	12000
C5840-10-160	10	160	20	24	12.5	17	100	20000

C5841

复位机构
Round latch locks
Mat：1.3503 / 58-60HRC
Compability:HASCO Z164

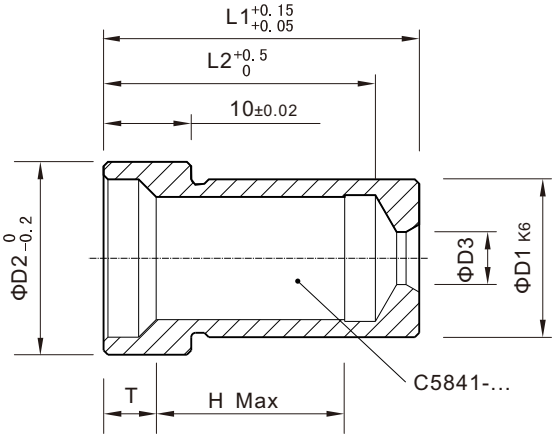

Code	D3	L1	D1	D2	L2	T	H.max
C5841-6 -36	6	36	18	22	31	6.7	24
C5841-6 -46		46			41		34
C5841-6 -56		56			51		44
C5841-10-36	10	36	24	29	30		23
C5841-10-46		46			40		33
C5841-10-56		56			50		43
C5841-10-76		76			70		63

C5860

螺纹限位机构
Two-stage ejectors
Mat：1.3503 / 58-60HRC
Compability: CUMAS LR

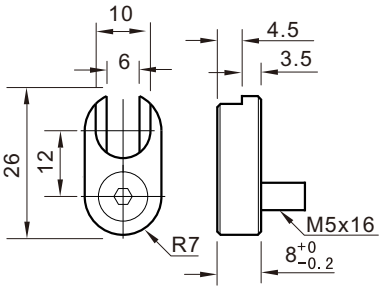

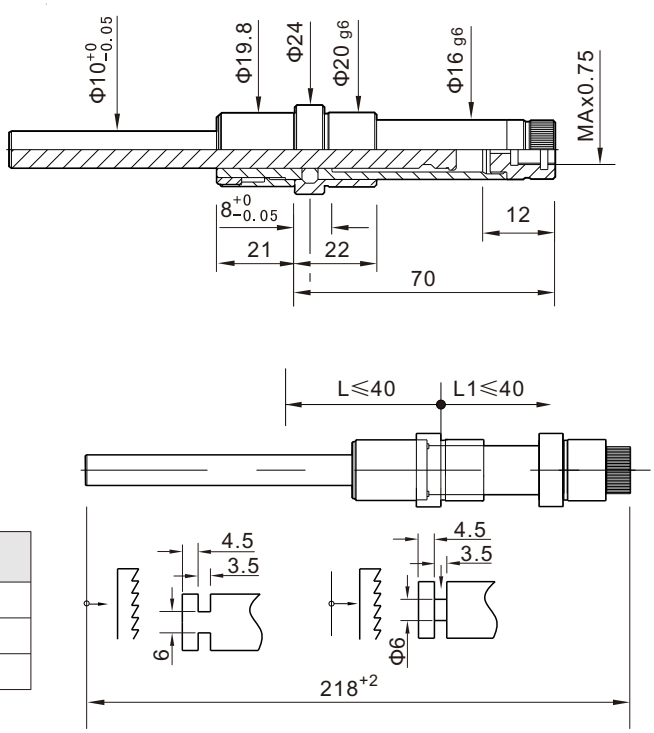

Code	D	M
C5860-061620	**6**	-
C5860-081620	**8**	C5861
C5860-101620	**10**	-

C5861

螺纹限位机构
Two-stage ejectors
Mat：1.3503 / 58-60HRC
Compability:CUMAS AL

Code	M
C5861-0800M4	**M4x10**
C5861-0800M5	**M5x10**
C5861-0800M6	**M6x10**
C5861-0800M8	**M8x10**

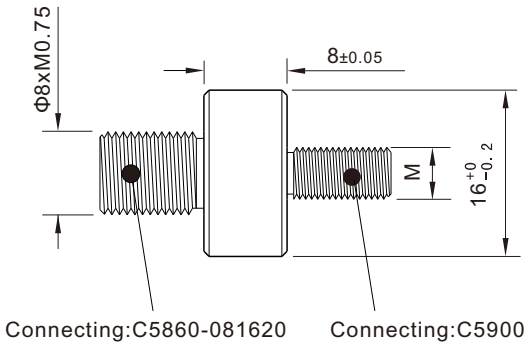

C5880

来复线杆
Helical spindle
Mat：1.2738 / 900HV
Compability: HASCO Z1500

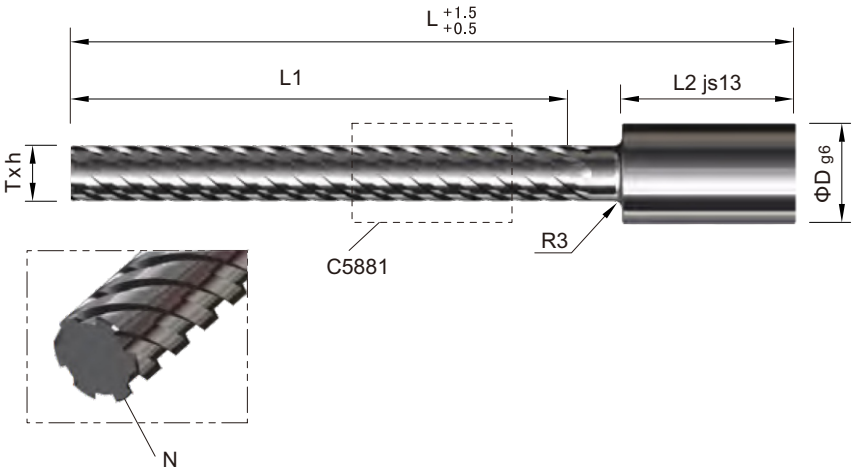

Code	T×h	R	L1	L	L2	D	N
C5880-16-50 -R-160	Tr16× 50	R	160	240	50	28	5
C5880-16-50 -R-250			250	330			
C5880-16-63 -R-160	Tr16× 63		160	240			
C5880-16-63 -R-250			250	330			
C5880-20-63 -R-250	Tr20× 63			345	63	36	6
C5880-20-63 -R-315			315	410			
C5880-20-80 -R-250	Tr20× 80		250	345			7
C5880-20-80 -R-315			315	410			
C5880-20-100-R-250	Tr20×100		250	345			
C5880-20-100-R-315			315	410			
C5880-25-80 -R-315	Tr25× 80			430	80	45	8
C5880-25-80 -R-400			400	515			
C5880-25-100-R-315	Tr25×100		315	430			9
C5880-25-100-R-400			400	515			
C5880-25-125-R-315	Tr25×125		315	430			
C5880-25-125-R-400			400	515			
C5880-25-160-R-315	Tr25×160		315	430			10
C5880-25-160-R-400			400	515			
C5880-32-100-R-355	Tr32×100		355	490	100	56	9
C5880-32-100-R-450			450	585			
C5880-32-125-R-355	Tr32×125		355	490			10
C5880-32-125-R-450			450	585			
C5880-32-160-R-355	Tr32×160		355	490			
C5880-32-160-R-450			450	585			
C5880-32-200-R-355	Tr32×200		355	490			11
C5880-32-200-R-450			450	585			

C5880

来复线杆
Helical spindle
Mat：1.2738 / 900HV
Compability: HASCO Z1500

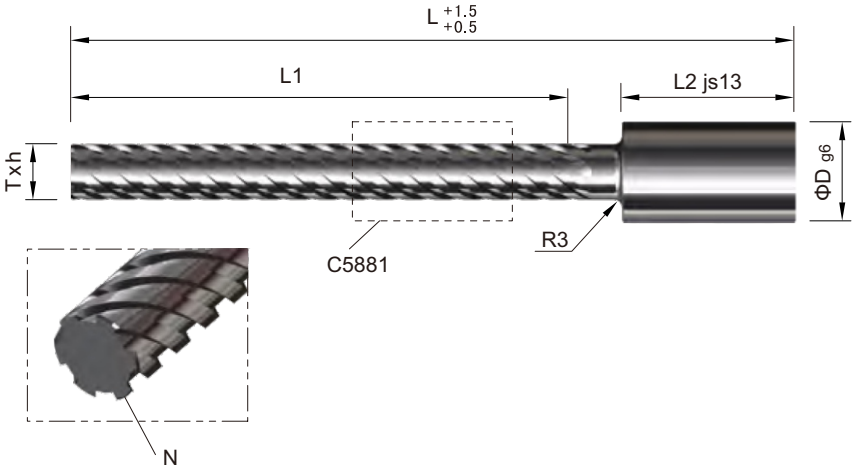

Code	T×h	R	L1	L	L2	D	N
C5880-16-50 -L-160	Tr16× 50	L	160	240	50	28	5
C5880-16-50 -L-250			250	330			
C5880-16-63 -L-160	Tr16× 63		160	240			
C5880-16-63 -L-250			250	330			
C5880-20-63 -L-250	Tr20× 63			345	63	36	6
C5880-20-63 -L-315			315	410			
C5880-20-80 -L-250	Tr20× 80		250	345			7
C5880-20-80 -L-315			315	410			
C5880-20-100-L-250	Tr20×100		250	345			
C5880-20-100-L-315			315	410			
C5880-25-80 -L-315	Tr25× 80			430	80	45	8
C5880-25-80 -L-400			400	515			
C5880-25-100-L-315	Tr25×100		315	430			9
C5880-25-100-L-400			400	515			
C5880-25-125-L-315	Tr25×125		315	430			
C5880-25-125-L-400			400	515			
C5880-25-160-L-315	Tr25×160		315	430			10
C5880-25-160-L-400			400	515			
C5880-32-100-L-355	Tr32×100		355	490	100	56	9
C5880-32-100-L-450			450	585			
C5880-32-125-L-355	Tr32×125		355	490			10
C5880-32-125-L-450			450	585			
C5880-32-160-L-355	Tr32×160		355	490			
C5880-32-160-L-450			450	585			
C5880-32-200-L-355	Tr32×200		355	490			11
C5880-32-200-L-450			450	585			

C5881

来复线套
Helical spindle
Mat : 2.1247
Compability: HASCO Z1520

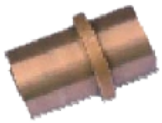

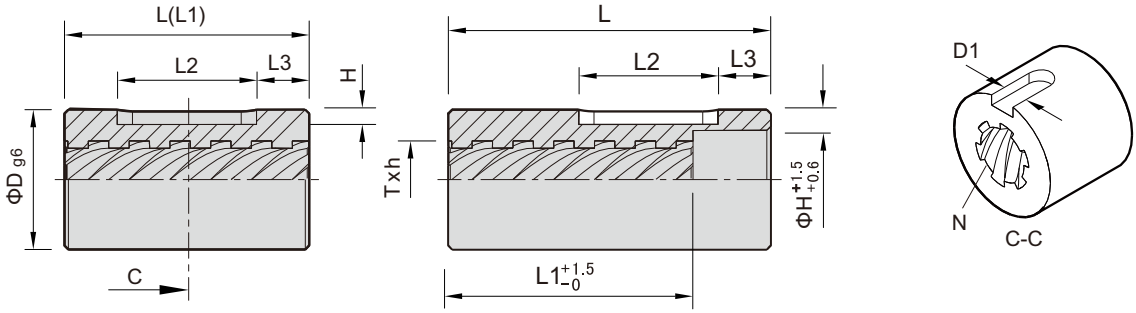

Type-A

Type-B

Code	T×h	R	Type	L	L1	L2	L3	D	D1	H	N
C5881-16-50 -R- 50	Tr16× 50	R	A	50	50	28	11	28	6	2.8	5
C5881-16-50 -R- 80			B	80		40	15				
C5881-16-63 -R- 50	Tr16× 63		A	50		28	11				
C5881-16-63 -R- 80			B	80		40	15				
C5881-20-63 -R- 63	Tr20× 63		A	63	63	36	13.5	36	8	3.8	6
C5881-20-63 -R-100			B	100		50	18				
C5881-20-80 -R- 63	Tr20× 80		A	63		36	13.5				7
C5881-20-80 -R-100			B	100		50	18				
C5881-20-100-R- 63	Tr20×100		A	63		36	13.5				
C5881-20-100-R-100			B	100		50	18				
C5881-25-80 -R- 80	Tr25× 80		A	80	80		15	45	12	4.8	8
C5881-25-80 -R-125			B	125		63	20				
C5881-25-100-R- 80	Tr25×100		A	80		50	15				9
C5881-25-100-R-125			B	125		63	20				
C5881-25-125-R- 80	Tr25×125		A	80		50	15				
C5881-25-125-R-125			B	125		63	20				
C5881-25-160-R- 80	Tr25×160		A	80		50	15				10
C5881-25-160-R-125			B	125		63	20				
C5881-32-100-R-100	Tr32×100		A	100	100	63	18.5	56	14	5.5	9
C5881-32-100-R-160			B	160		80	25				
C5881-32-125-R-100	Tr32×125		A	100		63	18.5				10
C5881-32-125-R-160			B	160		80	25				
C5881-32-160-R-100	Tr32×160		A	100		63	18.5				
C5881-32-160-R-160			B	160		80	25				
C5881-32-200-R-100	Tr32×200		A	100		63	18.5				11
C5881-32-200-R-160			B	160		80	25				

C5881

来复线套
Helical spindle
Mat : 2.1247
Compability: HASCO Z1520

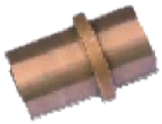

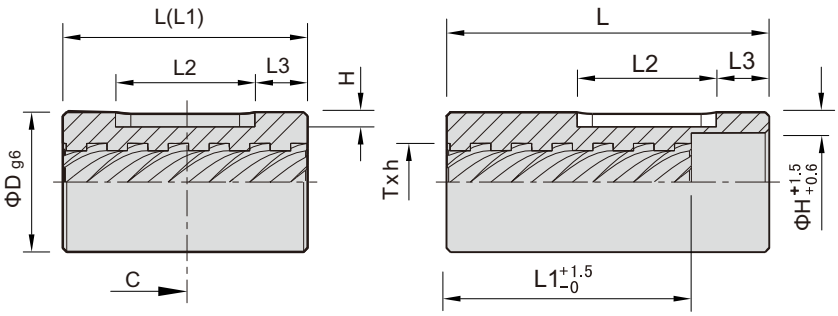

Type-A

Type-B

Code	T×h	R	Type	L	L1	L2	L3	D	D1	H	N
C5881-16-50 -L- 50	Tr16× 50	L	A	50	50	28	11	28	6	2.8	5
C5881-16-50 -L- 80			B	80		40	15				
C5881-16-63 -L- 50	Tr16× 63		A	50		28	11				
C5881-16-63 -L- 80			B	80		40	15				
C5881-20-63 -L- 63	Tr20× 63		A	63	63	36	13.5	36	8	3.8	6
C5881-20-63 -L-100			B	100		50	18				
C5881-20-80 -L- 63	Tr20× 80		A	63		36	13.5				7
C5881-20-80 -L-100			B	100		50	18				
C5881-20-100-L- 63	Tr20×100		A	63		36	13.5				
C5881-20-100-L-100			B	100		50	18				
C5881-25-80 -L- 80	Tr25× 80		A	80	80		15	45	12	4.8	8
C5881-25-80 -L-125			B	125		63	20				
C5881-25-100-L- 80	Tr25×100		A	80		50	15				9
C5881-25-100-L-125			B	125		63	20				
C5881-25-125-L- 80	Tr25×125		A	80		50	15				
C5881-25-125-L-125			B	125		63	20				
C5881-25-160-L- 80	Tr25×160		A	80		50	15				10
C5881-25-160-L-125			B	125		63	20				
C5881-32-100-L-100	Tr32×100		A	100	100	63	18.5	56	14	5.5	9
C5881-32-100-L-160			B	160		80	25				
C5881-32-125-L-100	Tr32×125		A	100		63	18.5				10
C5881-32-125-L-160			B	160		80	25				
C5881-32-160-L-100	Tr32×160		A	100		63	18.5				
C5881-32-160-L-160			B	160		80	25				
C5881-32-200-L-100	Tr32×200		A	100		63	18.5				11
C5881-32-200-L-160			B	160		80	25				

C5900

弹弓顶
Sprung cores
Mat：1.2344 / 48-52HRC
Compability: CUMAS PW

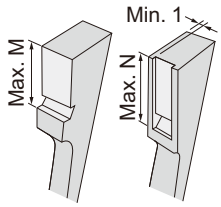

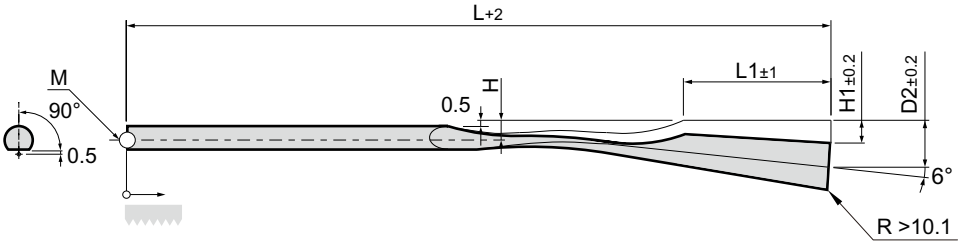

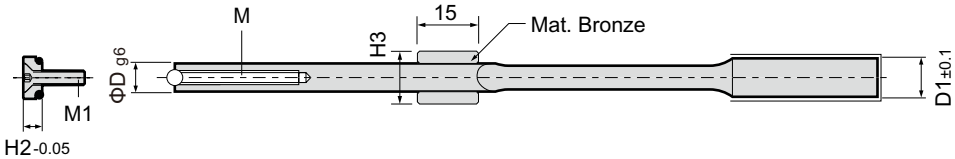

Code	D	D1	L1	D2	H	H1	H2	H3	L	M max.	N max.	R	M	M1
C5900-060622	6	6.2	22	9	3.5	3.5	5	-	125	16	18	1.25	M4x36	M4x16
C5900-060630			30	10		4.5		12	175	20	26			
C5900-060822		8.2	22	9		3.5		-	125	16	18			
C5900-060830			30	10		4.5		12	175	20	26			
C5900-080825	8		25	11.5	4.5		6	-	140	18	21	2	M5x36	M5x16
C5900-081025		10.2												
C5900-081030			30	11.2				12	175	20	26			
C5900-081225		12.2	25	11.5				-	140	18	21			
C5900-081230			30	11.2				12	175	20	26			
C5900-101430	10	14.2		13.6	5.5	5.5	8	16				2.5	M6x36	M6x16
C5900-101630		16.2												
C5900-101830		18.2												

C5901

弹弓顶
Sprung cores
Mat：1.3343 / 56-58HRC
Compability: CUMAS PF

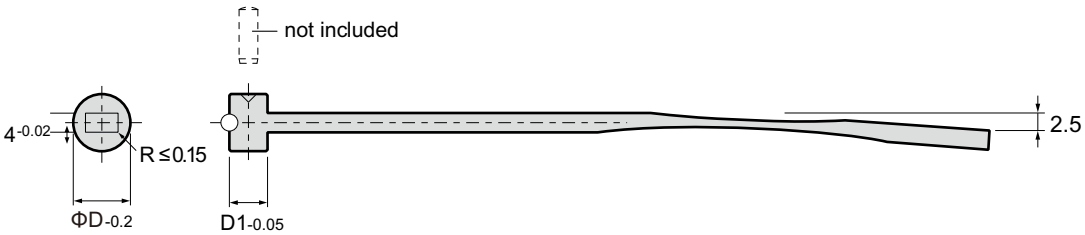

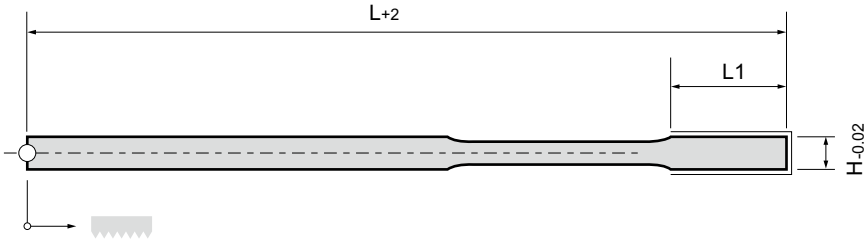

Code	H	L	D	D1	L1	R
C5901- 044150	4	150	8	6	24	30
C5901- 054150	5					
C5901- 064200	6	200	12	8	30	36
C5901-0642WB						
C5901- 084200	8		14			
C5901-0842WB						
C5901- 104200	10		16			
C5901-1042WB						
C5901- 124200	12		18			
C5901-1242WB						

C5902

弹弓顶
Sprung cores
Mat：1.2344 / 48-52HRC
Compability: CUMAS MP

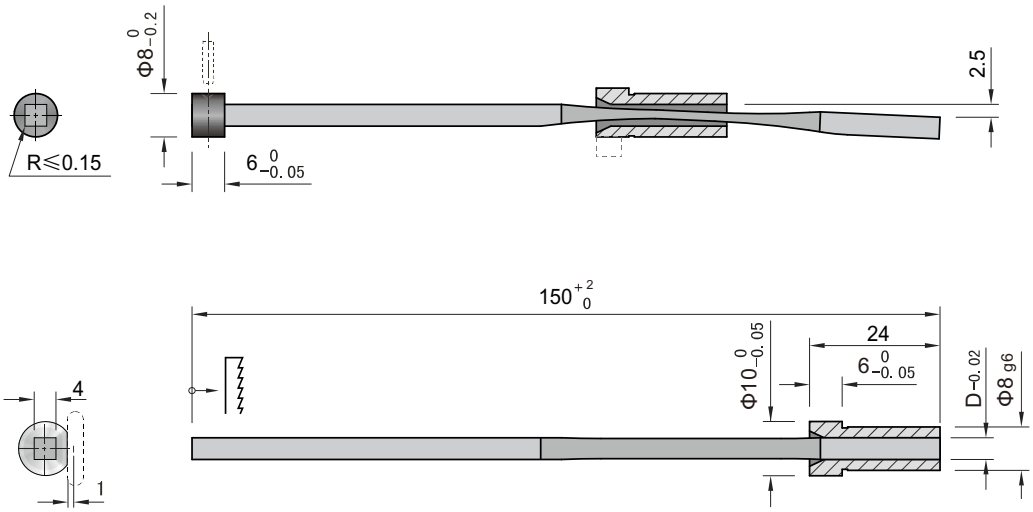

Code	D
C5902-044150	**4**
C5902-054150	**5**

C5910

弹弓顶

Sprung cores

Mat：1.3343 / 58-60HRC

Compability: MEUSBURGER E3200

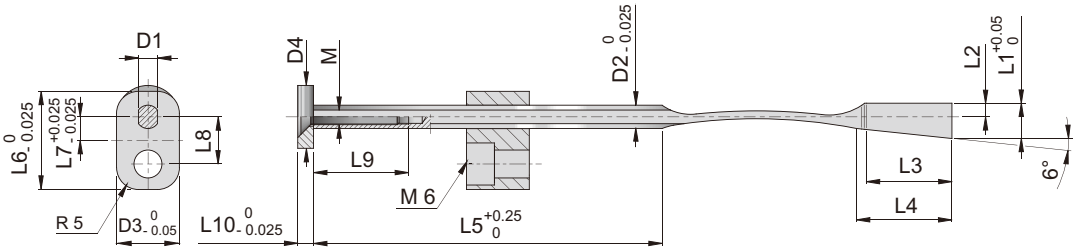

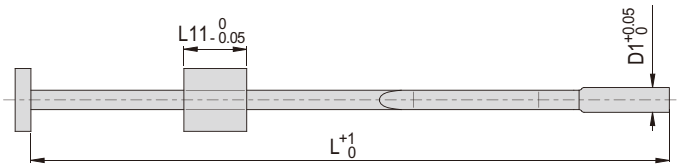

Code	D	L1	L	D1	D2	D3	D4	L2	L3	L4	L5	L6	L7	L8	L9	L10	L11	M	Gud max./ stroke max.
C5910-6 -9 -162	**6.2**	**9**	**162**	4.83	5.94	16	16	3.5	22	24.3	88	25	6	12	19	4	16	M4	3.5
C5910-8 -9 -162	**8.2**			5.08	6.35														
C5910-10-11.5-200	**10.2**	**11.5**	**200**	7.37	7.92			4.5	26	30	111							M5	4.5
C5910-12-11.5-200	**12.2**																		
C5910-14-12.5-200	**14.2**	**12.5**							30	33.1	107								
C5910-16-12.5-200	**16.2**																		

C5911

两瓣弹弓顶
Sprung cores
Mat：1.2344 / 48-52HRC
Compability: MEUSBURGER E3202

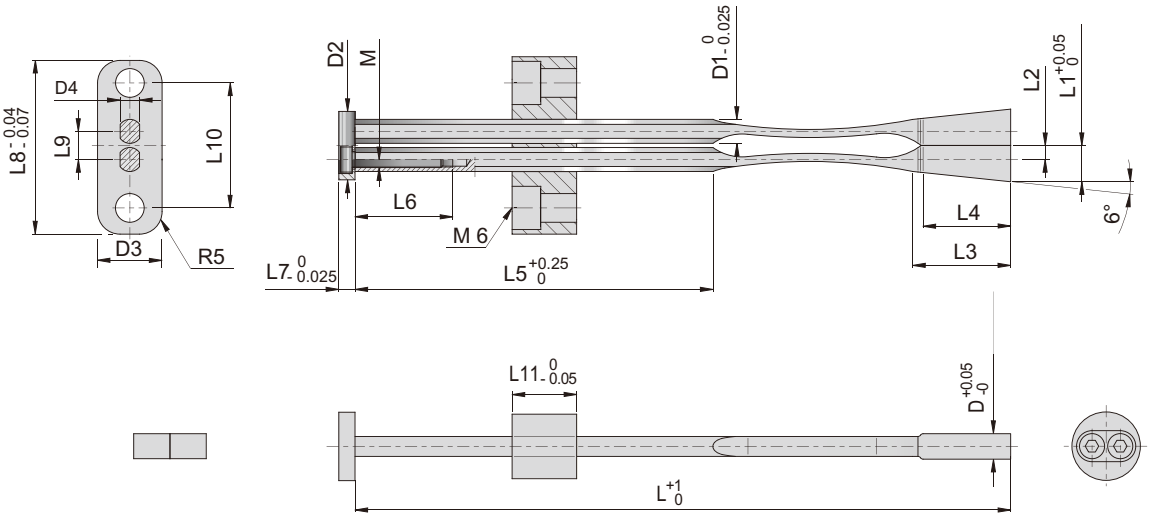

Code	D	L1	L	D1	D2	D3	D4	L2	L3	L4	L5	L6	L7	L8	L9	L10	L11	M	Hub max. / Stroke max.
C5911- 6 -9.0 -162	**6.2**	**9**	**162**	5.94	20	16	4.83	3.5	24.3	22	88	19	6	45	7	32.2	20	M4	3.5
C5911-12-11.5-200	**12.2**	**11.5**	**200**	7.92	22		7.37	4.5	30	26	111			48	9	34.3		M5	4.5
C5911-14-12.5-200	**14.2**	**12.5**							33.1	30	107								
C5911-16-12.5-200	**16.2**																		

C5920

四瓣弹弓顶
Sprung cores
Mat：1.3343 / 58-60HRC
Compability: CUMAS EE

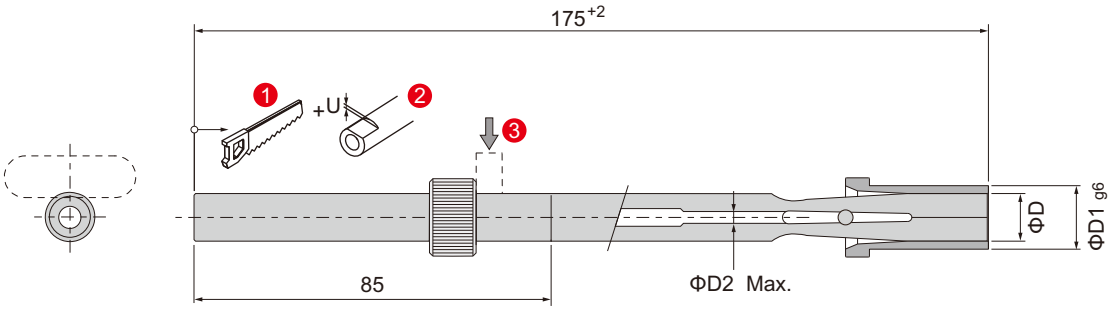

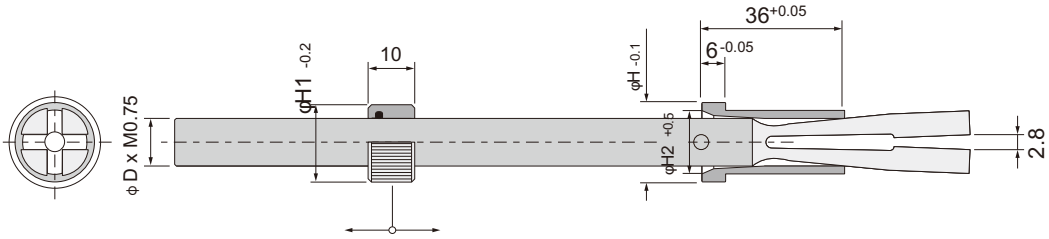

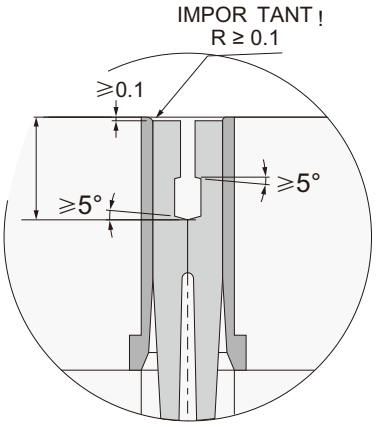

Code	D	D1	D2	H	H1	H2	U	Balinit C®
C5920-060175	**6**	10	-	12	12	9	0.5	■
C5920-082175	**8**	12	2	14	14	11		
C5920-103175	**10**	14	3	16	16	13		
C5920-124175	**12**	16	4	18	18	15		
C5920-168175	**16**	20	8	22	22	19	1	

TMC®
TOOMOCO

7

冷却系列

Cooling series

C7003 7.03

喉塞

Pressure plugs

HASCO Z94

C7005 7.04

喉塞

Pressure plugs

HASCO Z941

C7006 7.04

喉塞

Pressure plugs

HASCO Z942

C7100 7.07

唧嘴

Surue bushing

HASCO Z511

C7101 7.09

唧嘴

Surue bushing

HASCO Z512

C7003

喉塞

Pressure plugs

Mat： Messing

Compability: HASCO Z94

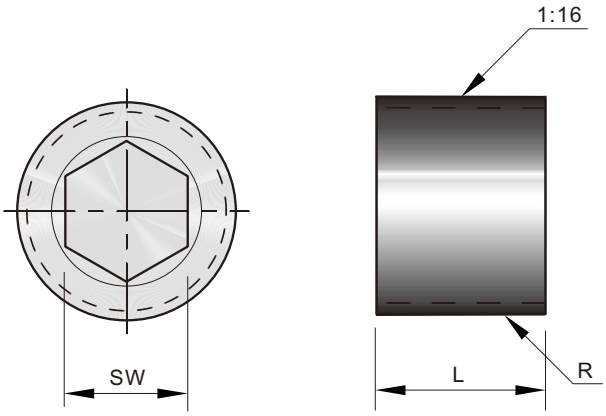

Code	L	SW	R
C7003-5- 0.5	5	3	M5x 0.5
C7003-7- 1	8		M7x 1
C7003-8 -0.75		4	M8x0.75
C7003-9- 1		5	M9x 1
C7003-10- 1			M10x 1
C7003-11- 1		6	M11x 1
C7003-12- 1.5	10		M12x1.5
C7003-14- 1.5	8	7	M14x1.5
C7003- Rp1/8	10	5	Rp1/8A
C7003- Rp1/4		7	Rp1/4A
C7003- Rp3/8		8	Rp3/8A
C7003- Rp1/2		10	Rp1/2A

C7005

喉塞
Pressure plugs
Mat：Miessing
Compability: HASCO Z941

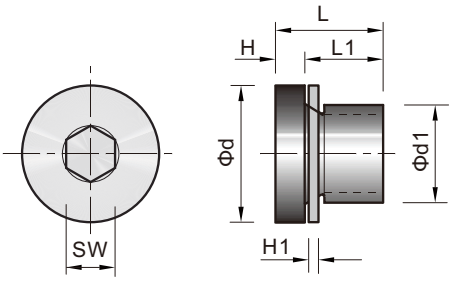

Code	H	H1	L	L1	SW	d	d1
C7005-10- 1	3	1	11	8	5	14	M10× 1
C7005-12-1.5		1.5	15	12	6	17	M12×1.5
C7005-14-1.5					8	19	M14×1.5
C7005- Rp1/8		1	11	8	5	14	Rp1/8
C7005- Rp 1/4		1.5	15	12	6	18	Rp1/4
C7005- Rp 3/8					8	22	Rp3/8
C7005- Rp 1/2	4		18	14	10	26	Rp1/2

C7006

喉塞
Pressure plugs
Mat：Messing
Compability: HASCO Z942

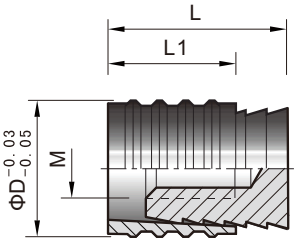

Code	D	L	L1	M
C7006- 6	6	11.7	8	M3
C7006- 8	8			M4
C7006-10	10	14	10	M6
C7006-12	12			
C7006-15	15	16	12	M8
C7006-16	16			

C7100

卿嘴

Surue bushing

Mat：1.2344

Compability: HASCO Z511

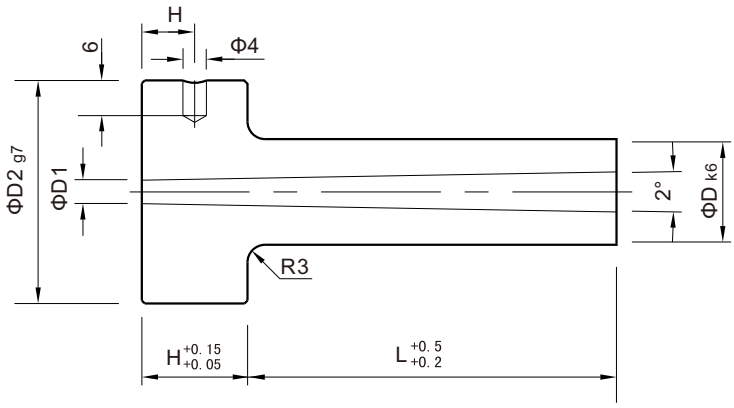

Code	D	L	D1	D2	H
C7100-12-22-2.5	12	22	2.5	28	13
C7100-12-27-2.5		27			
C7100-12-36-2.5		36			
C7100-12-46-2.5		46			
C7100-12-22-3.5		22	3.5		
C7100-12-27-3.5		27			
C7100-12-36-3.5		36			
C7100-12-46-3.5		46			
C7100-12-56-3.5		56			
C7100-18-27- 3	18	27	3	38	18
C7100-18-36- 3		36			
C7100-18-46- 3		46			
C7100-18-56- 3		56			
C7100-18-66- 3		66			
C7100-18-76- 3		76			
C7100-18-86- 3		86			
C7100-18-96- 3		96			
C7100-18-116- 3		116			
C7100-18-27- 4		27	4		
C7100-18-36- 4		36			
C7100-18-46- 4		46			
C7100-18-56- 4		56			
C7100-18-66- 4		66			
C7100-18-76- 4		76			
C7100-18-86- 4		86			
C7100-18-96- 4		96			
C7100-18-116 -4		116			

C7100

唧嘴

Surue bushing

Mat：1.2344

Compability: HASCO Z511

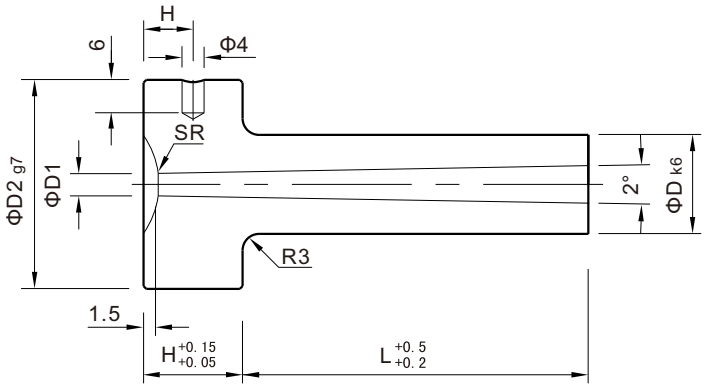

Code	SR	Code	SR	D	L	D1	D2	H
C7100-12-22-2.5-15.5		C7100-12-22-2.5-40			22			
C7100-12-27-2.5-15.5		C7100-12-27-2.5-40			27	2.5		
C7100-12-36-2.5-15.5		C7100-12-36-2.5-40			36			
C7100-12-46-2.5-15.5		C7100-12-46-2.5-40			46			
C7100-12-22-3.5-15.5		C7100-12-22-3.5-40		12	22		28	13
C7100-12-27-3.5-15.5		C7100-12-27-3.5-40			27			
C7100-12-36-3.5-15.5		C7100-12-36-3.5-40			36	3.5		
C7100-12-46-3.5-15.5		C7100-12-46-3.5-40			46			
C7100-12-56-3.5-15.5		C7100-12-56-3.5-40			56			
C7100-18-27-3- 15.5		C7100-18-27-3- 40			27			
C7100-18-36-3- 15.5		C7100-18-36-3- 40			36			
C7100-18-46-3- 15.5		C7100-18-46-3- 40			46			
C7100-18-56-3- 15.5		C7100-18-56-3- 40			56			
C7100-18-66-3- 15.5	15.5	C7100-18-66-3- 40	40		66	3		
C7100-18-76-3- 15.5		C7100-18-76-3- 40			76			
C7100-18-86-3- 15.5		C7100-18-86-3- 40			86			
C7100-18-96-3- 15.5		C7100-18-96-3- 40			96			
C7100-18-116 -3-15.5		C7100-18-116 -3-40		18	116		38	18
C7100-18-27-4- 15.5		C7100-18-27-4- 40			27			
C7100-18-36-4- 15.5		C7100-18-36-4- 40			36			
C7100-18-46-4- 15.5		C7100-18-46-4- 40			46			
C7100-18-56-4- 15.5		C7100-18-56-4- 40			56			
C7100-18-66-4- 15.5		C7100-18-66-4- 40			66	4		
C7100-18-76-4- 15.5		C7100-18-76-4- 40			76			
C7100-18-86-4- 15.5		C7100-18-86-4- 40			86			
C7100-18-96-4- 15.5		C7100-18-96-4- 40			96			
C7100-18-116- 4-15.5		C7100-18-116 -4-40			116			

C7101

卿嘴

Surue bushing

Mat：1.2344

Compability: HASCO Z512

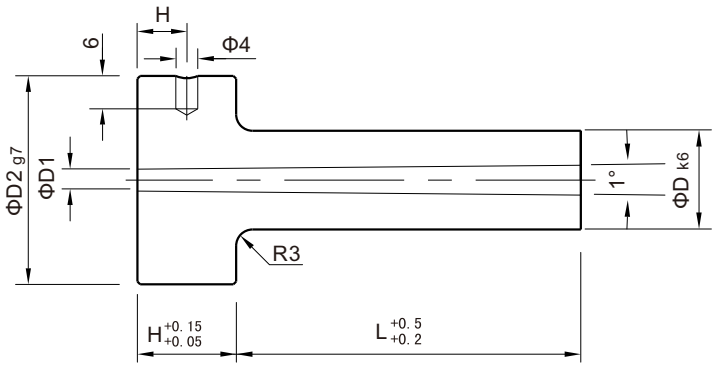

Code	D	L	D1	D2	H
C7101-12-27-2.5	12	27	2.5	28	13
C7101-12-36-2.5		36			
C7101-12-46-2.5		46			
C7101-12-56-2.5		56			
C7101-12-36-3.5		36	3.5		
C7101-12-46-3.5		46			
C7101-12-56-3.5		56			
C7101-12-66-3.5		66			
C7101-12-76-3.5		76			
C7101-18-46- 3	18	46	3	38	18
C7101-18-56- 3		56			
C7101-18-66- 3		66			
C7101-18-76- 3		76			
C7101-18-86- 3		86			
C7101-18-96- 3		96			
C7101-18-56- 4		56	4		
C7101-18-66- 4		66			
C7101-18-76- 4		76			
C7101-18-86- 4		86			
C7101-18-96- 4		96			
C7101-18 -116-4		116			

C7101

哪嘴

Surue bushing

Mat：1.2344

Compability: HASCO Z512

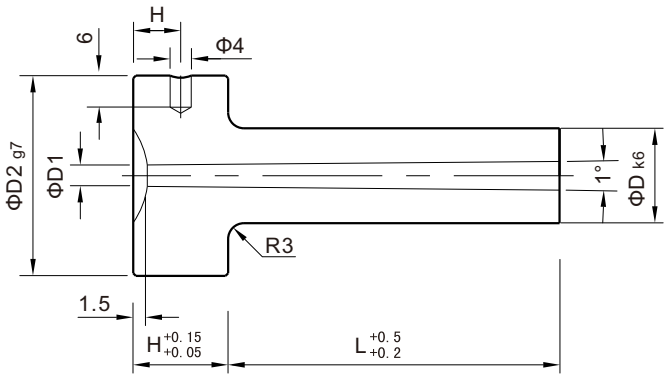

Code	D	L	D1	D2	H	SR
C7101-12-27-2.5-15.5	12	27	2.5	28	13	15.5
C7101-12-36-2.5-15.5		36				
C7101-12-46-2.5-15.5		46				
C7101-12-56-2.5-15.5		56				
C7101-12-36-3.5-15.5		36	3.5			
C7101-12-46-3.5-15.5		46				
C7101-12-56-3.5-15.5		56				
C7101-12-66-3.5-15.5		66				
C7101-12-76-3.5-15.5		76				40
C7101-12-27-2.5- 40		27	2.5			
C7101-12-36-2.5- 40		36				
C7101-12-46-2.5- 40		46				
C7101-12-56-2.5- 40		56				
C7101-12-36-3.5- 40		36	3.5			
C7101-12-46-3.5- 40		46				
C7101-12-56-3.5- 40		56				
C7101-12-66-3.5- 40		66				
C7101-12-76-3.5- 40		76				

C7101

唧嘴

Surue bushing

Mat：1.2344

Compability: HASCO Z512

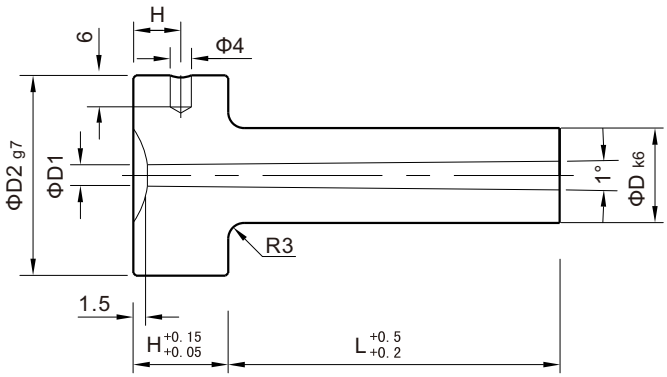

Code	D	L	D1	D2	H	SR
C7101-18-46-3- 15.5	18	46	3	38	18	15.5
C7101-18-56-3- 15.5		56				
C7101-18-66-3- 15.5		66				
C7101-18-76-3- 15.5		76				
C7101-18-86-3- 15.5		86				
C7101-18-96-3- 15.5		96				
C7101-18-56-4- 15.5		56	4			
C7101-18-66-4- 15.5		66				
C7101-18-76-4- 15.5		76				
C7101-18-86-4- 15.5		86				
C7101-18-96-4- 15.5		96				
C7101-18-116 -4-15.5		116				
C7101-18-46-3- 40		46	3			40
C7101-18-56-3- 40		56				
C7101-18-66-3- 40		66				
C7101-18-76-3- 40		76				
C7101-18-86-3- 40		86				
C7101-18-96-3- 40		96				
C7101-18-56-4- 40		56	4			
C7101-18-66-4- 40		66				
C7101-18-76-4- 40		76				
C7101-18-86-4- 40		86				
C7101-18-96-4- 40		96				
C7101-18-116-4- 40		116				

NPT和BSPT和BSPP参数

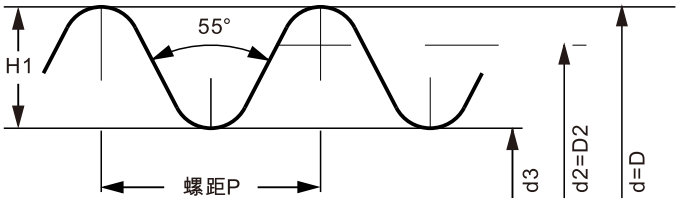

NPT(Z):牙型角60°							
规格	每寸牙数	大径d=D	中径d2=D2	小径d3	螺距P	牙型 高度H1	底孔尺寸（堵头）
1/16	27	7.894	7.142	6.389	0.941	0.752	7
1/8	27	10.242	9.489	8.737	0.941	0.752	8.8
1/4	18	13.616	12.487	11.358	1.411	1.129	12
3/8	18	17.055	15.926	14.797	1.411	1.129	15.5
1/2	14	21.224	19.772	18.321	1.814	1.451	19.5
3/4	14	26.569	25.117	23.666	1.814	1.451	25
1	11.5	33.228	31.461	29.649	2.209	1.767	31
1-1/4	11.5	41.985	40.218	38.451	2.209	1.767	40
1-1/2	11.5	48.054	46.287	44.520	2.209	1.767	46
BSPT(PT,ZG,R外,Rc内）：牙型角55°							
规格	每寸牙数	大径d=D	中径d2=D2	小径d3	螺距P	牙型 高度H1	底孔尺寸（堵头）
1/16	28	7.723	7.142	6.561	0.907	0.581	7
1/8	28	9.728	9.147	8.566	0.907	0.581	8.8
1/4	19	13.157	12.031	11.445	1.337	0.856	12
3/8	19	16.662	15.803	14.95	1.337	0.856	15.5
1/2	14	20.955	19.793	18.631	1.814	1.162	19.5
3/4	14	26.441	25.279	24.117	1.814	1.162	25
1	11	33.249	31.77	30.291	2.309	1.479	31.5
1-1/4	11	41.91	40.131	38.952	2.309	1.479	40
1-1/2	11	47.803	46.324	44.845	2.309	1.479	46
BSPT(BSP,BSPF,PS,PF,G,RP):牙型角55°							
规格	每寸牙数	大径d=D	中径d2=D2	小径d3	螺距P	牙型 高度H1	底孔尺寸（堵头）
1/8	28	9.728	9.147	8.566	0.907	0.581	8.7
1/4	19	13.157	12.301	11.445	1.337	0.856	11.6
3/8	19	16.662	15.806	14.95	1.337	0.856	15
1/2	14	20.955	19.793	18.631	1.814	1.162	19
5/8	14	22.911	21.749	20.587	1.814	1.162	21
3/4	14	26.441	25.279	24.117	1.814	1.162	24.5
7/8	14	30.201	29.039	27.877	1.814	1.162	28
1	11	33.249	31.77	30.291	2.309	1.479	30.5
1-1/8	11	37.897	36.418	34.939	2.309	1.479	35.5
1-1/4	11	41.91	40.431	38.952	2.309	1.479	39.5
1-3/8	11	44.323	42.844	41.365	2.309	1.479	41.5
1-1/2	11	47.803	46.324	44.845	2.309	1.479	45
1-3/4	11	53.746	52.267	50.788	2.309	1.479	51
2	11	59.614	58.135	56.656	2.309	1.479	57

硬度换算表

(HRC) 洛氏硬度 C	(HV) 维氏硬度	布氏硬度 10mm球 荷载 3000kgf		洛氏硬度[修]			洛氏表面硬度 金刚石圆锥压头			(Hs) 肖氏硬度	抗拉强度 (近似值) Mpa (kgf/mm²) (2)
		标准球	碳化钨球	(HRA) A标度 载荷60kgf 金刚石圆锥压头	(HRB) B标度 载荷100kgf 直径1.6mm (1/16in)球	(HRD) D标度 载荷100kgf 金刚石圆锥压头	15-N 标度 载荷15kgf	30-N 标度 载荷30kgf	45-N 标度 载荷45kgf		
68	940	—	—	85.6	—	76.9	93.2	84.4	75.4	97	—
67	900	—	—	85.0	—	76.1	92.9	83.6	74.2	95	—
66	865	—	—	84.5	—	75.4	92.5	82.8	73.3	92	—
65	832	—	(739)	83.9	—	74.5	92.2	81.9	72.0	91	—
64	800	—	(722)	83.4	—	73.8	91.8	81.1	71.0	88	—
63	772	—	(705)	82.8	—	73.0	91.4	80.1	69.9	87	—
62	746	—	(688)	82.3	—	72.2	91.1	79.3	68.8	85	—
61	720	—	(670)	81.8	—	71.5	90.7	78.4	67.7	83	—
60	697	—	(654)	81.2	—	70.7	90.2	77.5	66.6	81	—
59	674	—	(634)	80.7	—	69.9	89.8	76.6	65.5	80	—
58	653	—	615	80.1	—	69.2	89.3	75.7	64.3	78	—
57	633	—	595	79.6	—	68.5	88.9	74.8	63.2	76	—
56	613	—	577	79.0	—	67.7	88.3	73.9	62.0	75	—
55	595	—	560	78.5	—	66.9	87.9	73.0	60.9	74	2075(212)
54	577	—	543	78.0	—	66.1	87.4	72.0	59.8	72	2015(205)
53	560	—	525	77.4	—	65.4	86.9	71.2	58.5	71	1950(199)
52	544	(500)	512	76.8	—	64.6	86.4	70.2	57.4	69	1880(192)
51	528	(487)	496	76.3	—	63.8	85.9	69.4	56.1	68	1820(186)
50	513	(475)	481	75.9	—	63.1	85.5	68.5	55.0	67	1760(179)
49	498	(464)	469	75.2	—	62.1	85.0	67.6	53.8	66	1695(173)
48	484	451	455	74.7	—	61.4	84.5	66.7	52.5	64	1635(167)
47	471	442	443	74.1	—	60.8	83.9	65.8	51.4	63	1580(161)
46	458	432	432	73.6	—	60.0	83.5	64.8	50.3	62	1530(156)
45	446	421	421	73.1	—	59.2	83.0	64.0	49.0	60	1480(151)
44	434	409	409	72.5	—	58.5	82.5	63.1	47.8	58	1435(146)
43	423	400	400	72.0	—	57.7	82.0	62.2	46.7	57	1385(141)
42	412	390	390	71.5	—	56.9	81.5	61.3	45.5	56	1340(136)
41	402	381	381	70.9	—	56.2	80.9	60.4	44.3	55	1295(132)
40	392	371	371	70.4	—	55.4	80.4	59.5	43.1	54	1250(127)
39	382	362	362	69.9	—	54.6	79.9	58.6	41.9	52	1215(124)
38	372	353	353	69.4	—	53.8	79.4	57.7	40.8	51	1180(120)
37	363	344	344	68.9	—	53.1	78.8	56.8	39.6	50	1160(118)
36	354	336	336	68.4	(109.0)	52.3	78.3	55.9	38.4	49	1115(114)
35	345	327	327	67.9	(108.5)	51.5	77.7	55.0	37.2	48	1080(110)
34	336	319	319	67.4	(108.0)	50.8	77.2	54.2	36.1	47	1055(108)
33	327	311	311	66.8	(107.5)	50.0	76.6	53.3	34.9	46	1025(105)
32	318	301	301	66.3	(107.0)	49.2	76.1	52.1	33.7	44	1000(102)
31	310	294	294	65.8	(106.0)	48.4	75.6	51.3	32.7	43	980 (100)
30	302	286	286	65.3	(105.5)	47.7	75.0	50.4	31.3	42	950 (97)
29	294	279	279	64.7	(104.5)	47.0	74.5	49.5	30.1	41	930 (95)
28	286	271	271	64.3	(104.0)	46.1	73.9	48.6	28.9	41	910 (93)
27	279	264	264	63.8	(103.0)	45.2	73.3	47.7	27.8	40	880 (90)
26	272	258	258	63.3	(102.5)	44.6	72.8	46.8	26.7	38	860 (88)
25	266	253	253	62.8	(101.5)	43.8	72.2	45.9	25.5	38	840 (86)
24	260	247	247	62.4	(101.0)	43.1	71.6	45.0	24.3	37	825 (84)
23	254	243	243	62.0	100.0	42.1	71.0	44.0	23.1	36	805 (82)
22	248	237	237	61.5	99.0	41.6	70.5	43.2	22.0	35	785 (80)
21	243	231	231	61.0	98.5	40.9	69.9	42.3	20.7	35	770 (79)
20	238	226	226	60.5	97.8	40.1	69.4	41.5	19.6	34	760 (77)
(18)	230	219	219	—	96.7	—	—	—	—	33	730 (75)
(16)	222	212	212	—	95.5		—		—	32	705 (72)
(14)	213	203	203	—	93.9		—		—	31	675 (69)
(12)	204	194	194	—	92.3		—		—	29	650 (66)
(10)	196	187	187	—	90.7		—		—	28	620 (63)
(8)	188	179	179	—	89.5		—		—	27	600 (61)
(6)	180	171	171	—	87.1		—		—	26	580 (59)
(4)	173	165	165	—	85.5		—		—	25	550 (56)
(2)	166	158	158	—	83.5		—		—	24	530 (54)
(0)	160	152	152	—	81.7		—		—	24	515 (53)

注：(1)1MPa=1N/mm²=1/9.80665kgf/mm²

(2)表中括号( )中的数字很少使用，仅供参考.

常用配合中孔的尺寸容许公差

基准尺寸的分类 (mm)		孔的公差带																																	单位 μm
大于	至	B10	C9	C10	D8	D9	C10	E7	E8	E9	F6	F7	F8	G6	G7	H6	H7	H8	H9	H10	JS6	JS7	K6	K7	M6	M7	N6	N7	P6	P7	R7	S7	T7	U7	X7
—	3	+180 +140	+85 +60	+100 +60	+34 +20	+45 +20	+60 +20	+24 +14	+28 +14	+39 +14	+12 +6	+16 +6	+20 +6	+8 +2	+12 +2	+6 +0	+10 0	+14 0	+25 0	+40 0	±3	±5	0 −6	0 −10	−2 −8	−2 −12	−4 −10	−4 −14	−6 −12	−6 −16	−10 −20	−14 −24	–	−18 −28	−20 −30
3	6	+188 +140	+100 +70	+118 +70	+48 +30	+60 +30	+78 +30	+32 +20	+38 +20	+50 +20	+18 +10	+22 +10	+28 +10	+12 +4	+16 +4	+8 +0	+12 0	+18 0	+30 0	+48 0	±4	±6	+2 −6	+3 −9	−1 −9	0 −12	−5 −13	−4 −16	−9 −17	−8 −20	−11 −23	−15 −27	–	−19 −31	−24 −36
6	10	+208 +150	+116 +80	+138 +80	+62 +40	+76 +40	+98 +40	+40 +25	+47 +25	+61 +25	+22 +13	+28 +13	+35 +13	+14 +5	+20 +5	+9 0	+15 0	+22 0	+36 0	+58 0	±4.5	±7	+2 −7	+5 −10	−3 −12	0 −15	−17 −16	−4 −19	−12 −21	−9 −24	−13 −28	−17 −32	–	−22 −37	−28 −43
10	14	+220 +150	+138 +95	+165 +95	+77 +50	+93 +50	+120 +50	+50 +32	+59 +32	+75 +32	+27 +16	+34 +16	+43 +16	+17 +6	+24 +16	+11 0	+18 0	+27 0	+43 0	+70 0	±5.5	±9	+2 −9	+6 −12	−4 −15	0 −18	−9 −20	−5 −23	−15 −26	−11 −29	−16 −34	−21 −39	–	−26 −44	−33 −51
14	18																																		−38 −56
18	24	+244 +160	+162 +110	+194 +110	+98 +65	+117 +65	+149 +65	+61 +40	+73 +40	+92 +40	+33 +20	+41 +20	+53 +20	+20 +7	+28 +7	+13 0	+21 0	+33 0	+52 +0	+84 0	±6.5	±10	+2 +11	+6 −15	−4 −17	0 −21	−11 −24	−7 −28	−18 −31	−14 −35	−20 −41	−27 −48	–	−33 −54	−46 −67
24	30																																−33 −54	−40 −61	−56 −77
30	40	+270 +170	+182 +120	+220 +120	+119	+142	+180	+75	+89	+112	+41	+50	+64	+25	+34	+16	+25	+39	+62	+100	±8	±12	+3	+7	−4	0	−12	−8	−21	−17	−25	−34	−39 −64	−51 −76	–
40	50	+280 +180	+192 +130	+230 +130	+80	+80	+80	+50	+50	+50	+25	+25	+25	+9	+9	0	0	0	0	0			+13	−18	−20	−25	−28	−33	−37	−42	−50	−59	−45 −70	−61 −86	
50	65	+310 +190	+214 +140	+260 +140	+146	+174	+220	+90	+106	+134	+49	+60	+76	+29	+40	+19	+30	+46	+74	+120	±9.5	±15	+4	+9	+5	+0	−14	−9	−26	−21	−30 −60	−42 −72	−55 −85	−76 −106	–
65	80	+320 +200	+224 +150	+270 +150	+100	+100	+100	+60	+60	+60	+30	+30	+30	+10	+10	0	+10	+10	0	0			+15	−21	+24	−30	−33	−39	−45	−51	−32 −62	−48 −78	−64 −94	−91 −121	
80	100	+360 +220	+257 +170	+310 +170	+174	+207	+260	+107	+126	+159	+58	+71	+90	+34	+47	+22	+35	+54	+87	+140	±11	±17	+4	+10	−6	0	−16	−10	−30	−24	−38 −73	−58 −93	−78 −113	−111 −146	–
100	120	+380 +240	+267 +180	+320 +180	+120	+120	+120	+72	+72	+72	+36	+36	+36	+12	+12	0	0	0	0	0			−18	−25	−28	−35	−38	−45	−52	−59	−41 −76	−66 −101	−91 −126	−131 −166	
120	140	+420 +260	+300 +200	+360 +200																											−48 −88	−77 −117	−107 −147		
140	160	+440 +280	+310 +210	+370 +210	+208 +145	+245 +145	+305 +145	+125 +85	+148 +85	+185 +85	+68 +43	+83 +43	+106 +43	+39 +14	+54 +14	+25 0	+40 0	+63 0	+100 0	+160 0	±12.5	±20	+4 +21	+12 −28	−8 −33	0 −40	−20 −45	−12 −52	−36 −61	−28 −68	−50 −90	−85 −125	−119 −159	–	–
160	180	+470 +310	+330 +230	+390 +230																											−53 −93	−93 −133	−131 −171		
180	200	+525 +340	+355 +240	+425 +240																											−60 −106	−105 −151			
200	225	+565 +380	+375 +260	+445 +260	+242 +170	+285 +170	+355 +170	+146 +100	+172 +100	+215 +100	+79 +50	+96 +50	+122 +50	+44 +15	+61 +15	+29 0	+46 0	+72 0	+115 0	+185 0	±14.5	±23	+5 +24	+13 −33	−8 −37	0 −46	−22 −51	−14 −60	−41 −70	−33 −79	−63 −109	−113 −159	–	–	–
225	250	+605 +420	+395 +280	+465 +280																											−67 −113	−123 −169			
250	280	+690 +480	+430 +300	+510 +300	+271	+320	+400	+162	+191	+240	+88	+108	+137	+49	+69	+32	+52	+81	+130	+210	±16	±26	+5	+16	−9	0	−25	−14	−47	−36	−74 −126	–	–	–	–
280	315	+750 +540	+460 +330	+540 +330	+190	+190	+190	+110	+110	+110	+56	+56	+56	+17	+17	0	0	0	0	0			+27	−36	−41	−52	−57	−66	−79	−88	−78 −130				
315	355	+830 +600	+500 +360	+590 +360	+299	+350	+440	+182	+214	+265	+98	+119	+151	+54	+75	+36	+57	+89	+140	+230	±18	±28	+7	+17	−10	0	−26	−16	−51	−41	−87 −144	–	–	–	–
355	400	+910 +680	+540 +400	+630 +400	+210	+210	+210	+125	+125	+125	+62	+62	+62	+18	+18	0	0	0	0	0			+29	−40	−46	−57	−62	−73	−87	−98	−93 −150				
400	450	+1010 +760	+595 +440	+690 +440	+327	+385	+480	+198	+232	+290	+108	+131	+165	+60	+83	+40	+63	+97	+155	+250	±20	±31	+8	+18	−10	0	−27	−17	−55	−45	−103 −166	–	–	–	–
400	500	+1090 +840	+635 +480	+730 +480	+230	+230	+230	+135	+135	+135	+68	+68	+68	+20	+20	0	0	0	0	0			+32	−45	−50	−63	−67	−80	−95	108	−109 −172				

备　注：表中的各段中，上侧的数值为尺寸容许公差的上限，下侧的数值为尺寸容许公差的下限。

常用配合中轴的尺寸容许公差

基准尺寸的分类 (mm)		轴的公差带																															单位 μm
大于	至	b9	c9	d8	d9	e7	e8	e9	f6	f7	f8	g5	g6	h5	h6	h7	h8	h9	js5	js6	js7	k5	k6	m5	m6	n5*	n6	p6	r6	s6	t6	u6	x6
—	3	-140 -165	-60 -85	-20 -34	-20 -45	-14 -24	-14 -28	-14 -39	-6 -12	-6 -16	-6 -20	-2 -6	-2 -8	0 -4	0 -6	0 -10	0 -14	0 -25	±2	±3	±5	+4 0	+6 0	+6 +2	+8 +2	+8 +4	+10 +4	+12 +6	+16 +10	+20 +14	–	+24 +18	+26 +20
3	6	-140 -170	-70 -100	-30 -48	-30 -60	-20 -32	-20 -38	-20 -50	-10 -18	-10 -22	-10 -28	-4 -9	-4 -12	0 -5	0 -8	0 -12	0 -18	0 -30	±2.5	±4	±6	+6 +1	+9 +1	+9 +4	+12 +4	+13 +8	+16 +8	+20 +12	+23 +15	+27 +19	–	+31 +23	+36 +28
6	10	-150 -186	-80 -116	-40 -62	-40 -76	-25 -40	-25 -47	-25 -61	-13 -22	-13 -28	-13 -35	-5 -11	-5 -14	0 -6	0 -9	0 -15	0 -22	0 -36	±3	±4.5	±7	+7 +1	+10 +1	+12 +6	+15 +6	+16 +10	+19 +10	+24 +15	+28 +19	+32 +23	–	+37 +28	+43 +34
10	14	-150 -193	-95 -138	-50 -77	-50 -93	-32 -50	-32 -59	-32 -75	-16 -27	-16 -34	-16 -43	-6 -14	-6 -17	0 -8	0 -11	0 -18	0 -27	0 -43	±4	±5.5	±9	+9 +1	+12 +1	+15 +7	+18 +7	+20 +12	+23 +12	+29 +18	+34 +23	+39 +28	–	+44 +33	+51 +40
14	18																																+56 +45
18	24	-160 -212	-110 -162	-65 -98	-65 -117	-40 -61	-40 -73	-40 -92	-20 -33	-20 -41	-20 -53	-7 -16	-7 -20	0 -9	0 -13	0 -21	0 -33	0 -52	±4.5	±6.5	±10	+11 +2	+15 +2	+17 +8	+21 +8	+24 +15	+28 +15	+35 +22	+41 +28	+48 +35	–	+54 +41	+67 +54
24	30																														+54 +41	+61 +48	+77 +64
30	40	-170 -232	-120 -182	-80 -119	-80 -142	-50 -75	-50 -89	-50 -112	-25 -41	-25 -50	-25 -64	-9 -20	-9 -25	0 -11	0 -16	0 -25	0 -39	0 -62	±5.5	±8	±12	+13 +2	+18 +2	+20 +9	+25 +9	+28 +17	+33 +17	+42 +26	+50 +34	+59 +43	+64 +48	+76 +60	–
40	50	-180 -242	-130 -192																												+70 +54	+86 +70	
50	65	-190 -264	-140 -214	-100 -146	-100 -174	-60 -90	-60 -106	-60 -134	-30 -49	-30 -60	-30 -76	-10 -23	-10 -29	0 -13	0 -19	0 -30	0 -46	0 -74	±6.5	±9.5	±15	+15 +2	+21 +2	+24 +11	+30 +11	+33 +20	+39 +20	+51 +32	+60 +41	+72 +53	+85 +66	+106 +87	–
65	80	-200 -274	-150 -224																										+62 +43	+78 +59	+94 +75	+121 +102	
80	100	-220 -307	-170 -257	-120 -174	-120 -207	-72 -107	-72 -126	-72 -159	-36 -58	-36 -71	-36 -90	-12 -27	-12 -34	0 -15	0 -22	0 -35	0 -54	0 -87	±7.5	±11	±17	+18 +3	+25 +3	+28 +13	+35 +13	+38 +23	+45 +23	+59 +37	+73 +51	+93 +71	+113 +91	+146 +124	–
100	120	-240 -327	-180 -267																										+76 +54	+101 +79	+126 +104	+166 +144	
120	140	-260 -360	-200 -300	-145 -208	-145 -245	-85 -125	-85 -148	-85 -185	-43 -68	-43 -83	-43 -106	-14 -32	-14 -39	0 -18	0 -25	0 -40	0 -63	0 -100	±9	±12.5	±20	+21 +3	+28 +3	+33 +15	+40 +15	–	+52 +27	+68 +43	+88 +63	+117 +92	+147 +122	–	–
140	160	-280 -380	-210 -310																										+90 +65	+125 +100	+159 +134		
160	180	-310 -410	-230 -330																										+93 +68	+133 +108	+171 +146		
180	200	-340 -455	-240 -355	-170 -242	-170 -285	-100 -146	-100 -172	-100 -215	-50 -79	-50 -96	-50 -122	-15 -35	-15 -44	0 -20	0 -29	0 -46	0 -72	0 -115	±10	±14.5	±23	+24 +4	+33 +4	+37 +17	+46 +17	–	+60 +31	+79 +50	+106 +77	+151 +122	–	–	–
200	225	-380 -495	-260 -375																										+109 +80	+159 +130			
225	250	-420 -535	-280 -395																										+113 +84	+169 +140			
250	280	-480 -610	-300 -430	-190 -271	-190 -320	-110 -162	-110 -191	-110 -240	-56 -88	-56 -108	-56 -137	-17 -40	-17 -49	0 -23	0 -32	0 -52	0 -81	0 -130	±11.5	±16	±26	+27 +4	+36 +4	+43 +20	+52 +20	–	+66 +34	+88 +56	+126 +94	–	–	–	–
280	315	-540 -670	-330 -460																										+130 +98				
315	355	-600 -740	-360 -500	-210 -299	-210 -350	-125 -182	-125 -214	-125 -265	-62 -98	-62 -119	-62 -151	-18 -43	-18 -54	0 -25	0 -36	0 -57	0 -89	0 -140	±12.5	±18	±28	+29 +4	+40 +4	+46 +21	+57 +21	–	+73 +37	+98 +62	+144 +108	–	–	–	–
355	400	-680 -820	-400 -540																										+150 +114				
400	450	-760 -915	-440 -595	-230 -327	-230 -385	-135 -198	-135 -232	-135 -290	-68 -108	-68 -131	-68 -165	-20 -47	-20 -60	0 -27	0 -40	0 -63	0 -97	0 -155	±13.5	±20	±31	+32 +5	+45 +5	+50 +23	+63 +23	–	+80 +40	+108 +98	+166 +126	–	–	–	–
450	500	-840 -995	-480 -635																										+172 +132				

备　注：表中的各段中，上侧的数值为尺寸容许公差的上限，下侧的数值为尺寸容许公差的下限。